THEMIS
Project Data Management Plan

THM-SYS-012

07/15/2004

Timothy Quinn, THEMIS Science Operations Manager

Dr. Tai Phan, THEMIS Data Analysis Software Lead

Dr. Manfred Bester, THEMIS Mission Operations Manager

Dr. Ellen Taylor, THEMIS Mission Systems Engineer

Peter Harvey, THEMIS Project Manager

Document Revision Record

Rev.	Date	Description of Change	Approved By
1	12/03/2003	Preliminary Draft	-
2	06/07/2004	Second Draft	-
3	06/13/2004	Signature Version	See Signatories

Distribution List

Name	Email
Timothy Quinn, U.C. Berkeley	teq@ssl.berkeley.edu
Dr. Tai Phan, U.C. Berkeley	phan@ssl.berkeley.edu
Dr. Manfred Bester, U.C. Berkeley	manfred@ssl.berkeley.edu
Dr. Ellen Taylor, U.C. Berkeley	ertaylor@ssl.berkeley.edu
Peter Harvey, U.C. Berkeley	prh@ssl.berkeley.edu
Dr. Vassilis Angelopoulos, U.C. Berkeley	vassilis@ssl.berkeley.edu
Dr. Dave Sibeck, NASA GSFC	david.g.sibeck@nasa.gov
Dr. William Peterson, NASA Headquarters	william.k.Peterson@nasa.gov

TBD List

Identifier	Description

Table of Contents

DOCUMENT REVISION RECORD....2

DISTRIBUTION LIST....2

TBD LIST....2

1. INTRODUCTION....7

1.1 Purpose and Scope....7

1.2 Applicable Documents....7

2. PROJECT OVERVIEW....8

2.1 Science Objectives....8

2.2 Mission Summary....8

3. PROBE DESCRIPTION....10

3.1 Overview....10

3.2 Subsystem Descriptions....11

3.2.1 RF and Communications Subsystem (RFCS)....11

3.2.2 Guidance Navigation and Control (GN&C)....11

3.2.3 Command and Data Handling Subsystem (CDHS)....11

3.2.4 Power....12

3.2.5 Structural/Mechanical & Thermal....12

3.2.6 Bus Avionics Unit (BAU)....13

3.2.7 Probe Carrier Configuration and Launch....13

4. INSTRUMENT DESCRIPTIONS....14

4.1 Overview....14

4.2 Fluxgate Magnetometer....14

4.2.1 Science Requirements....14

4.2.2 Specification....15

4.2.3 Calibration....15

4.2.4 Boom Deployment....15

4.3 Electrostatic Analyzers (ESA)....16

4.3.1 Science Requirements....16

4.3.2 Specifications....16

4.3.3 Calibration....16

4.3.4 Aperture Cover Release....17

4.4 Solid State Telescope (SST)....17

4.4.1 Science Requirements. 17
4.4.2 Specifications 17
4.4.3 Calibration 17
4.4.4 Attenuator Operation 18
4.5 Search Coil Magnetometer 18
4.5.1 Science Requirements 18
4.5.2 Specifications 18
4.5.3 Calibration 18
4.5.4 Boom Deployment 18
4.6 Electric Field Instrument (EFI) 19
4.6.1 Science Requirements 19
4.6.2 Specifications 19
4.6.3 Calibration 20
4.6.4 Deployment Operations 20
4.7 Instrument Data Processing Unit (IDPU) 20
4.8 Ground Observations 21
4.8.1 Ground Based Observatories (GBO) 21
4.8.2 E/PO Ground Magnetometers (E/PO-GMAGS) 27
5. GROUND DATA SYSTEM (GDS) DESCRIPTION 28
5.1 Overview 28
5.2 Ground Stations 28
5.2.1 Berkeley Ground Station (BGS) 28
5.2.2 Secondary and Backup Ground Stations 28
5.2.3 Telemetry Files 29
5.3 Mission Operations Center (MOC) 29
5.3.1 Mission Operations 29
5.4 Flight Dynamics Center (FDC) 31
5.4.1 Overview 31
5.4.2 Software Tools 31
5.4.3 Operations 31
5.5 Flight Operations Team (FOT) 32
5.6 Science Operations Center (SOC) 32
5.6.1 Overview 32
6. PROJECT DATA FLOW 33

6.1 Overview 33
6.2 Probe Instrument Data 33
6.2.1 Collection – Time T0 34
6.2.2 Recovery – Time T1 (T0+8 Days Maximum) 34
6.2.3 Delivery to SOC – T1+1Hr 34
6.2.4 Level Zero Processing – Time T1+2Hrs 35
6.2.5 CDF Processing – Time T1+3Hrs 35
6.2.6 Diagnostic Plot Creation – T1+4Hrs 35
6.2.7 Browse/Key Parameter (K0) Data Creation – T1+24Hrs 35
6.2.8 K1 Data Creation – T1+1Month 35
6.2.9 K2 Data Creation – T1+6Months 36
6.3 GBO Data 37
6.3.1 Collection – Time T0 37
6.3.2 Thumbnail Image Recovery by UC – T0+1min 38
6.3.3 Health and Safety (H&S) Data Recovery – T0+1min 38
6.3.4 Thumbnail Image Copied to UCB – T0+5mins 38
6.3.5 Raw Magnetometer Data Recovered by UC and Copied to UCLA, UA, and UCB - T0+27hrs 39
6.3.6 UCLA Produces Processed GMAG Data – T0+28hrs 39
6.3.7 Keogram Recovery and Distribution – T0+30Hrs 39
6.3.8 Inclusion in Key Parameter Data – T0+30Hrs 39
6.3.9 Recovery and Distribution of Full Resolution Images – T0+6Months 39
6.4 E/PO GMAG Data 39
6.4.1 Collection – Time T0 39
6.4.2 Recovery – Time T0+27Hrs 39
6.4.3 Processed GMAG Data Produced and Distributed 39
6.5 SPASE Collaboration 39
7. INSTRUMENT COMMAND AND CONTROL 40
7.1.1 Overview 40
7.1.2 Instrument Commissioning 40
7.1.3 Normal Operations 40
7.2 GBO Installation, Monitoring, Control, and Maintenance 41
7.3 E/PO GMAG Control 41
8. SCIENCE DATA PRODUCTS 42

8.1 Instrument Data CDF Files 42
8.2 Instrument Data Calibration Files 42
8.3 Key Parameter Data 43
8.4 GBO Data and Products 44
8.4.1 ASI 44
8.4.2 GMAG 44
8.5 E/PO GMAG Data Products 44
9. DATA ACCESS 46
9.1 THEMIS Data Analysis Software Package File Search Tool 46
9.2 Website 46
10. DATA ANALYSIS SOFTWARE 46
10.1 Overview 46
10.2 File Search Tool 47
10.3 Moments & Fields Tool 47
10.4 Reading and Writing Tools 47
11. DATA ARCHIVING AND DISTRIBUTION 47
12. APPENDIX A. INSTRUMENT DATA QUANTITIES 49
13. APPENDIX B. INSTRUMENT DATA RATES 50
14. APPENDIX C. INSTRUMENT DATA VOLUMES 51

1. Introduction.

1.1 Purpose and Scope.

This document provides the Project Data Management Plan (PDMP) for the Time History of Events and Macroscale Interactions during Substorms (THEMIS) Explorer Mission. The PDMP describes all of the activities associated with the flow of THEMIS scientific data from collection on the spacecraft through production, distribution and access, and archiving of data and data products. This also includes extensive ground based imager and magnetometer measurements taken by 20 Ground Based Observatories (GBO's) spread across Alaska and Canada, and 10 Education and Public Outreach (E/PO) magnetometers spread across the northern continental United States.

1.2 Applicable Documents.

1.	THM-SYS-102	THEMIS Command Format Specification
2.	THM-SYS-115	THEMIS Telemetry Data Format Specification
3.	THM-SYS-116	THEMIS Telemetry Data Packet Format Specification
4.	THM-SYS-114	THEMIS Radio Frequency Interface Control Document
5.	THM-SYS-013	THEMIS Mission Operations Plan
6.	THM-SYS-018	THEMIS Launch and Early Orbit Operations Plan
7.	THM-SYS-019	THEMIS Contingency Plan

2. Project Overview.

2.1 Science Objectives.

The primary objective for the THEMIS project is to understand the onset and macroscale evolution of magnetospheric substorms. A substorm is an instability in the circulation of magnetic flux and plasma through the solar wind magnetospheric system ultimately linked to the familiar auroral eruptions on the Earth's polar ionosphere. Understanding the substorm instability is crucial for space science, basic plasma physics, and space weather, and has been identified by the National Research Council (NRC) as one of the main strategic questions in space physics. THEMIS will determine for the first time when and where in the magnetosphere substorms start, and how they evolve macroscopically. It will do so by timing well-known plasma particle and field signatures at several locations in the Earth's magnetotail while simultaneously determining the time and location of substorm onset at Earth using a dense network of ground observatories.

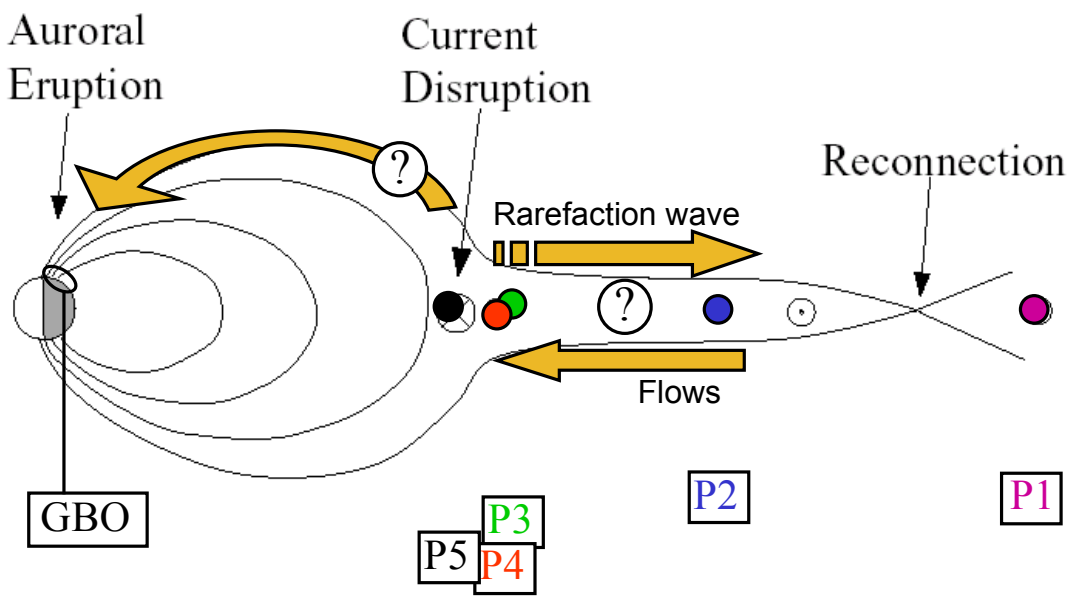

Figure 1. Science Objectives

2.2 Mission Summary.

The THEMIS science objectives are achieved by five space probes, P1 – P5, in High Earth Orbits (HEO) with similar perigee altitudes (1.16 to 1.5 earth radii, Re) and varying apogee altitudes. P1 has an apogee of ~30 Re, P2 at ~20 Re, and P3 - P5 at ~12 Re, with corresponding orbital periods of ~4, 2, and 1 days, respectively. This choice of periods results in multi-point conjunctions at apogee, allowing the probes to simultaneously measure substorm signatures over long distances along the magneto tail, while simplifying ground communications and scheduling. The probe conjunctions are tightly coordinated with the ground-based observatories within a 4-month primary observing season per year, centered on mid-February and carried out each year during a 2-year baseline mission. A store-and-forward data flow scheme retrieves prime conjunction plasma and fields data during substorm events with simple, automated science operations.

The ground observations will be carried out by 20 Ground Based Observatories (GBO) spread across Alaska and Canada. Each GBO will use an All Sky Imager (ASI - camera) and ground magnetometer (GMAG) to monitor the auroral light and ionospheric currents in order to localize the time, location, and evolution of the auroral manifestation of the substorm. A second ground network will include 10 Education and Public Outreach (E/PO) Ground Magnetometers located in schools at sub-auroral latitudes in the U.S.

Launch	**Vehicle: Delta II Eastern Range** **Injection: 1.1x12Re, 9 degrees inclination** **Date: October, 2006**
Space Segment	**Spacecraft: 5 spinning probes with fuel for orbit/attitude adjust** **Instruments: 3-Axis E-Field and B-Field, 3-D Ion and electron particle detectors** **Orbit Periods: 1, 2, and 4 days** **Spin Axis Orientation: Ecliptic normal**
Ground Segment	**Ground Based Observatories (GBO): 20 sites in Alaska (4) and Canada (16) containing All Sky Imagers (ASI) and Ground Magnetometers (GMAG)** **E/PO GMAGS: 10 GMAGS placed in schools located in Northern Latitude U.S.**
Operations	**Phases: I&T, L&EO (2 mo), Campaigns (December-March), De-orbit** **Lifetime: 2 years**

Table 1. THEMIS Mission Summary

3. Probe Description.

3.1 Overview

THEMIS employs 5 simple, identical, high heritage space probes (P1, P2, P3, P4, & P5) in coordinated orbits. Each probe consists of the probe bus (probe) and the instrument suite. The probe bus subsystems include Structural/Mechanical, Thermal, Power, RF and Communications (RFCS), Command and Data Handling (CDHS), and Guidance Navigation & Control (GN&C). The GNCS consists of the Attitude Control Subsystem (ACS) and the Reaction Control (propulsion) Subsystem (RCS). The electronics associated with the Power, CDHS, ACS, and RCS reside in the Bus Avionics Unit (BAU). The probe bus has a simple, low-rate S-band communications system with a store-and-forward (near perigee) strategy. It is supported by the General Dynamics ColdFire processor, hosting heritage software to perform data handling and minor fault detection activities. The power system is comprised of simple body-mounted solar panels and a small battery charged by a direct energy transfer controller. The probes are spin-stabilized and the Attitude Control System (ACS) uses a fault-tolerant cross-strapped monopropellant hydrazine blow-down system to control orbit, spin rate, and spin axis attitude. ACS is simplified by ground based attitude determination performed at UCB by the Flight Dynamics Center (FDC). All maneuver sequences are planned, checked (via a spacecraft simulator), uploaded, and executed during real-time ground communications.

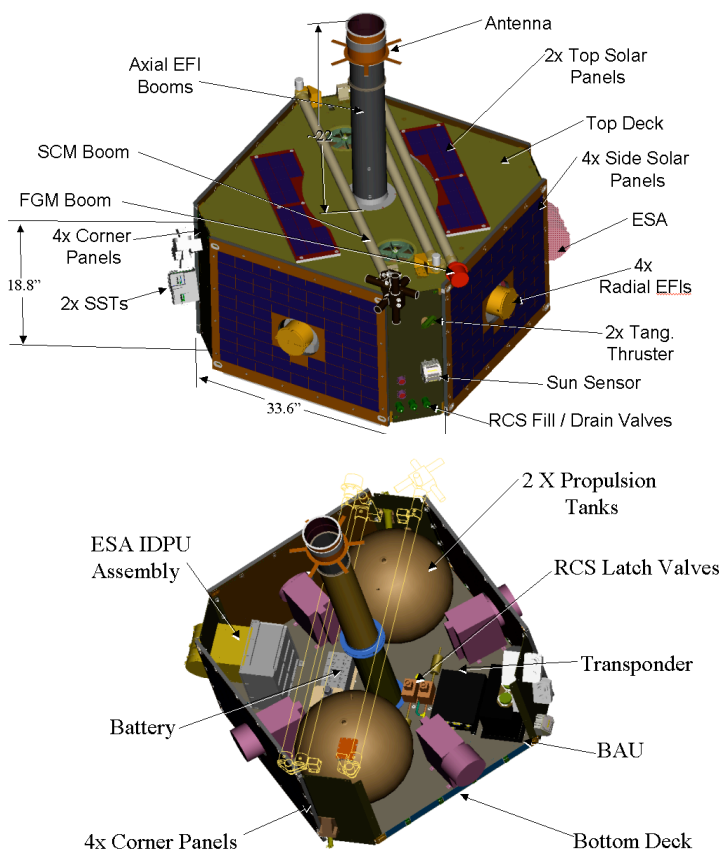

Figure 2. THEMIS Probe

3.2 Subsystem Descriptions.

3.2.1 RF and Communications Subsystem (RFCS).

The RFCS utilizes a NASA standard 5-Watt S-Band transponder for Command and Telemetry communications with a single cylindrical FAST-like antenna with a toroidal gain pattern. The transponder allows two-way Doppler ranging for accurate orbit determination. All probes use the same frequency pair for telemetry and commanding. Communications are established with one probe at a time. Command and telemetry protocols for the probes follow standard CCSDS procedures [1]. Downlink telemetry rates are selectable and available to optimize probe monitoring and telemetry recovery as a function of probe range. The nominal rate is 524.288 kbps, and the expected data volume during a science dump is 480 - 640 Mbits. The command uplink rate is fixed at 1 kbps.

Frequency	Downlink – 2282.5 MHz Uplink – 2101.8 MHz
Polarization	Left-Hand Circular Polarized (LHCP)
Modulation	Downlink – BPSK (4 highest data rates) PCM/PSK/PM (6 lowest data rates) Uplink - PCM/PSK/PM
Encoding	Downlink – Reed-Solomon + Rate-1/2 Convolution
Compression Scheme (VC3 only)	Differencing and truncation or Huffman (TBR)
Bit Rates	1.024, 4.096, 8.192, 16.384, 32.768, 65.536, 131.072, 262.144, 524.288, 1048.576 kbps
Virtual Channels	0-3, 6
Data Volume per Orbit per Probe	480 - 640 Mbits

Table 2. RF and Communications Subsystem Summary

3.2.2 Guidance Navigation and Control (GN&C)

The GN&C subsystem includes the Attitude Control Subsystem (ACS) and the Reaction Control Subsystem (RCS).

The ACS utilizes a thruster interface driven by ground-processed estimation and command algorithms with on-board limit and time-out protection. Attitude data collected from a Miniature Spinning Sun Sensor (MSSS) and the science Fluxgate Magnetometer (FGM) are sampled at 10 Hz and telemetered to the ground for standard, 3-axis, post-processing estimation. Ground generated thruster command sequences are tested in a high-fidelity probe simulator (I&T test bed migrated to MOC) prior to any upload. Also, two single-axis gyros, transverse to the spin plane, provide short-term attitude verification (prior to orbit maneuvers). The on-board protection logic monitors real-time sun aspect angle and spin period, comparing them to a ground commanded reference uploaded for each maneuver. If thresholds are exceeded, the maneuver is terminated.

The RCS includes two fuel tanks, a pressurization tank, a pyro valve, two latch valves, fuel line and fuel filters, and four 5-N thrusters: 2 oriented axially, (Both along +Z) for primary orbit placement ΔV and attitude control; and 2 oriented tangentially for spin up/down control and minor ΔV side thrusting for orbit fine tuning. The minimum thruster pulse duration is 50 milliseconds.

3.2.3 Command and Data Handling Subsystem (CDHS).

The CDHS provides real-time and stored command capability for the bus subsystems and instruments, collects, formats, and transmits to the ground data from the bus subsystems and instruments, provides engineering data storage, distributes time to the IDPU, and implements autonomous fault protection

features to ensure the health and safety of the probe. The CDHS functions are implemented in flight software and hardware that reside in the BAU.

CDHS receives uplink commands from the RFCS at a fixed rate of 100 bps using CCSDS telecommand protocols that guarantee correct, in-sequence delivery of variable-length command packets (embedded in command transfer frames) to the probe. Command transfer frames are authenticated. The CDHS is capable of accepting hardware commands (commands that do not require processor involvement) to perform critical operations such as hardware reconfiguration from the ground. Stored command capability in the form of Absolute Time Sequence (ATS) and Relative Time Sequence (RTS) loads is available for controlling the probe and instruments outside of a ground station contact.

CDHS data may involve real-time engineering, playback engineering, and real-time or playback science (from the IDPU). The CDHS collects and packetizes engineering data from the bus subsystem and instruments and either delivers these data to the RFCS in real-time for downlink (VC0), or stores the data locally in the BAU for playback at a later time (VC1).The CDHS will also route real-time (VC2) and stored (VC3) science data to the RFCS for downlink. The THEMIS telemetry format is based on CCSDS standards and data structures. The telemetry link is encoded using concatenated rate-1/2 (K=7) convolutional and Reed-Solomon (255,223,I=5) coding to allow for error correction. Also, the VC3 packet data are compressed, as described in [3].

VC ID	Description
0	Real-time Engineering Data (Probe and Instruments)
1	Stored Engineering Data (Probe and Instruments)
2	Real-time Science Data
3	Stored Science Data
6	Event Data
7	Fill Data

Table 3. Virtual Channel Summary

3.2.4 Power.

The Power Subsystem is a Direct Energy Transfer (DET) system with the battery and solar array connected directly to the power bus. The solar array consists of eight panels, four on each side, and two on each deck. At nominal attitudes, approximately 59 Watts EOL are provided by the side panels and 21 Watts EOL by the top and bottom panels. Accounting for battery recharging, increased eclipse heater power, and power control efficiencies, the minimum load power available is 41.7 Watts, easily achieving energy balance for the required load power of 29.2 Watts. Eclipse and peak transient loads (i.e., transmitter operation) are balanced with an 11.8 A-hr, 28V Lithium-Ion battery. Thermal management using heaters and thermistors keeps the battery temperature at -5 to +25 degrees C.

3.2.5 Structural/Mechanical & Thermal.

The probe consists of a lower deck, an upper deck, and four corner and side panels. The lower deck is the primary mounting surface for most of the instruments and probe components. The upper deck, corner, and side panels close out the probe internal cavity. The FGM and SCM mount to the upper deck; solar cells utilize the exterior surface of the probe side panels as their substrate. The ESA and SST instruments, the sun sensor, and thruster brackets mount to two of the corner panels for a clear Field of View (FOV). The mechanical and thermal designs provide a low conductance composite structure for isolation of the body-mounted solar panels, minimizing thermal energy effects between full-sun and shadow operations.

3.2.6 Bus Avionics Unit (BAU).

The BAU includes a SMEX-Lite heritage uplink/downlink communications card, a processor card (identical to the IDPU processor card), and a Direct Energy Transfer (DET) power control card with SMEX-Lite and EO-1 heritage. The flight software is derived from prior SMEX mission modules (in C-language) and is hosted by the heritage CMX-RTX Real-Time Operating System (RTOS). Instrument and bus housekeeping data are stored in the local bus memory, while science data are stored in the IDPU. During a ground station contact, housekeeping data are transmitted directly by the BAU while science data stored in the IDPU memory are sent to the BAU. The latter in turn merges these into the telemetry stream (bent pipe flow), similar to the FAST implementation.

3.2.7 Probe Carrier Configuration and Launch.

THEMIS will use a standard Delta sequence to directly inject the Probe Carrier Assembly (PCA) into the target insertion orbit. The PCA does not separate from the third stage. The probes separate from the probe carrier immediately after third stage burnout and yo-yo despin. The probes are electrically independent; each imitates separation based on built-in sequence timers and ELV separation signals, thereby eliminating any credible single point failure. For contingency, the separation can also be initiated by ground command. Multiple timers (hardware and software) are provided to protect against premature probe separation.

4. Instrument Descriptions.

4.1 Overview

Each probe contains an instrument complement that will measure DC and AC electric and magnetic fields as well as electron and ion energies and distributions. A detailed list of the instrument data quantities, data rates, and data volume is given in Appendix A, B, and C, respectively. The instruments and their probe placement and configuration are detailed in Figure 3 below.

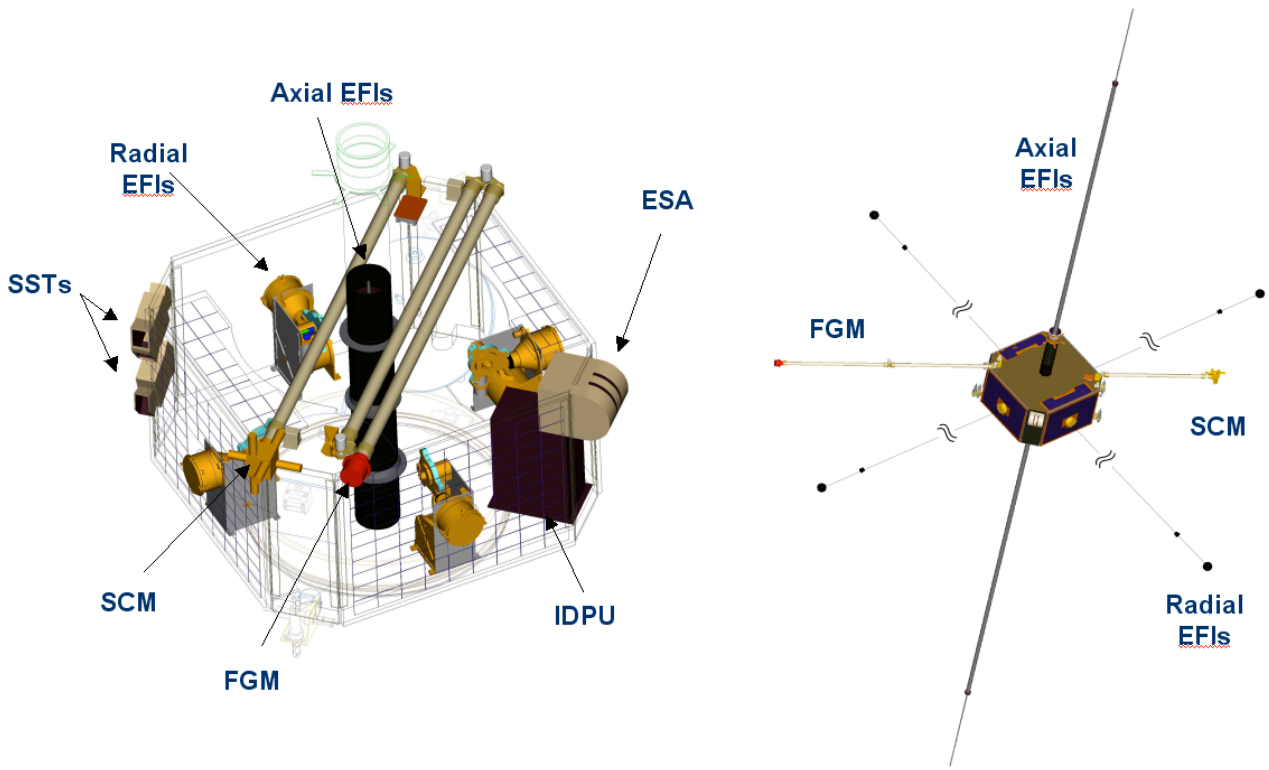

Figure 3. Instrument/Probe Configuration

4.2 Fluxgate Magnetometer

A tri-axial fluxgate magnetometer will measure the 3D ambient magnetic field in the frequency bandwidth from DC to 64 Hz (Nyquist).

4.2.1 Science Requirements

1) Measure DC and low frequency perturbations of the magnetic field
2) Time wave and structure propagation between probes
3) Provide information on plasma currents based on instantaneous magnetic field differences on two or more probes, separated by >0.2 Re.

4.2.2 Specification

The unit consists of two orthogonal ring core elements of different diameter, fixed with a bobbin. The unit is mounted on a 2-meter double-hinge carbon epoxy boom. The electronics consist of the driver and control circuits on a board within the IDPU. The controller controls digital excitation, data acquisition, feedback, and compensation, making the device low power. Its low noise permits easy inter-calibration with the search-coil magnetometer at frequencies of approximately 10 Hz.

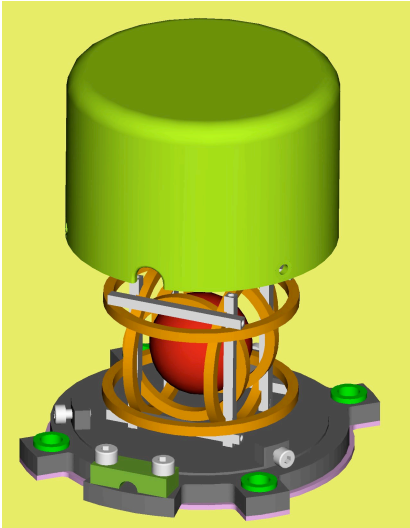

Figure 4. Fluxgate Magnetometer

4.2.3 Calibration

Although a 1 nT absolute accuracy requirement is achievable with independent sensor calibration, it is important to ascertain that two separate probes provide identical values when properties of the medium are steady. As required (near each apogee, perigee or both), calibration data will be collected at 32 Hz to determine (on individual probes) zero levels, gains, and sensor orientation. The magnetometers on all 5 probes will also be inter-calibrated during the early part of the mission (L&EO) using traversals of current-free (or low current density) regions of the magnetosphere. Also, as required during the second year of the mission, magnetometer data from probes P3, P4 and P5 will be collected at high rates outside of burst-mode triggers, in order to perform inter-calibration of their relative orientation and offsets in current-free regions. The validity of a divergence-free assumption (a theoretical necessity) will be used to ascertain the validity of the current-free approximation. If the divergence-free approximation cannot be easily met then time-tagged data from the probes traversing the same region will be compared for trend-recognition after long-term averaging.

4.2.4 Boom Deployment

During L&EO, once the FGM and SCM are operating, the magnetometer booms will be deployed by ground command. First the FGM data rate is set to 32 Hz and FGM data are monitored in the real-time telemetry stream (VC2). The prime and secondary boom release mechanisms are then commanded in succession. The FGM axis rotation is verified during deployment.

4.3 Electrostatic Analyzers (ESA).

The Electrostatic Analyzers will measure thermal ions and electrons in the range 5 eV - 30 keV.

4.3.1 Science Requirements

1) Plasma moments to within 10%, at high time resolution (10s or better) for inter-probe timing studies.
2) Instantaneous differences in velocity and ion pressure between probes, to estimate the scale size of transport, the size and strength of flow vortices and the pressure gradient.
3) Distribution functions of ions and electrons, to ascertain the presence of free energy sources.

4.3.2 Specifications

Both the ion and electron ESA have a look direction of 180 degrees in elevation, split in eight 22.5-degree bins (one per anode). Measurements over 4π steradian are made once per spin. The particles are selected in E/q (where q is the charge) by a sweeping potential applied in 32 steps, 32 times/spin (32 azimuths) between the outer (0 kV and the inner (~3 kV) concentric spheres in a Chevron configuration. On-board moment, pitch angle, and averaging computations are implemented at the IDPU. These operations routinely utilize FGM and SST data (to ensure correct values when the peak flux extends beyond the plasma instrument energy range). Even with onboard averaging, the ESAs generate nearly 3 kbytes of data each spin and thus require onboard moment calculations to obtain spin period data. 3-D distributions will be transmitted at a much lower cadence except during event bursts that will contain spin period distributions.

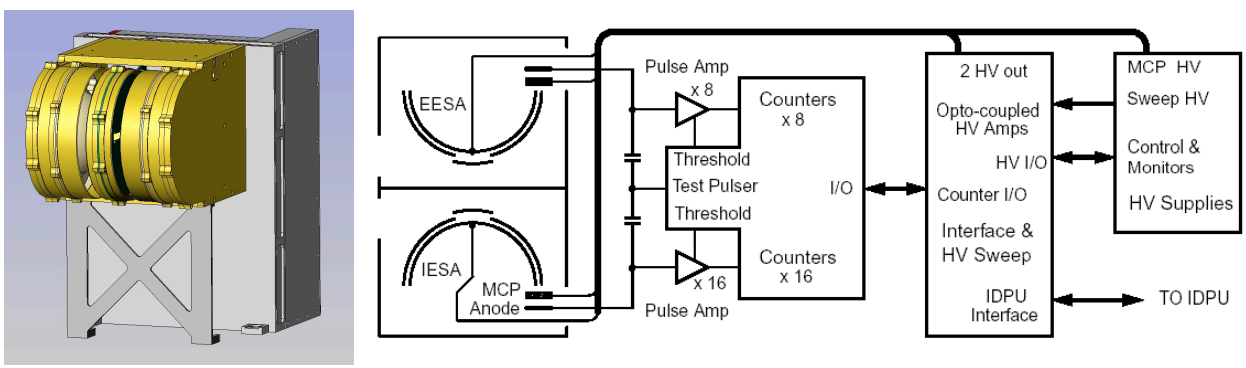

Figure 5. ESA

4.3.3 Calibration

The science requirement of 10% accuracy on moment computation can be met by independent calibration of the ESAs. However, by inter-calibrating hour-long averages of routinely collected particle distributions during quiet-time probe-conjunctions it is expected to surpass the accuracy obtained from independent ESA calibration.

An automated calibration procedure performs a complete angle/energy calibration of an instrument stack in less than 1 day. Calibration determines:

1) Analyzer constant, uniformity of energy/angle response
2) Hemisphere concentricity
3) Optimum MCP voltage
4) Sweep voltage verification
5) Relative geometric factors
6) Flight mode validation

Absolute geometric factor values are determined from computer simulations and calibrations with a Ni^{63} beta source.

4.3.4 Aperture Cover Release

During L&EO the ESA entrance aperture covers will be removed. This process will be commanded from the ground and the cover release is performed using a Shaped Metal Alloy (SMA) device.

4.4 Solid State Telescope (SST).

The Solid State Telescope (SST) measures the angular distribution (~3π steradian coverage) of super thermal ions and electrons. The detectors are identical to the SST pairs flown on the WIND spacecraft. Each probe carries two telescope pairs.

4.4.1 Science Requirements.

1) Perform remote sensing of the tail-ward moving current distribution boundary (at P3, P4, P5)
2) Measure the time-of-arrival of super thermal ions and electrons (30-300 keV, at 10s resolution or better) during injections, and ascertain the Rx onset time (P1, P2).

4.4.2 Specifications

Each of the two SSTs consists of a telescope pair with double-ended sensors, as shown in Figure 6. Individual sensors comprise three stacked, fully depleted, passivated, ion-implanted, 1.5 cm^2 silicon detectors. The center (T) detector is 600 μm thick, while the outside (O & F) detectors are 300 μm thick. Each of the four sensors measures ions and electrons via opposing sides of its detector. The two telescope pairs are mounted such that one pair of sensor aperatures points above the spin plane at 25 and 55 deg, and the other pair below the spin plane at –25 and –55 deg, respectively.

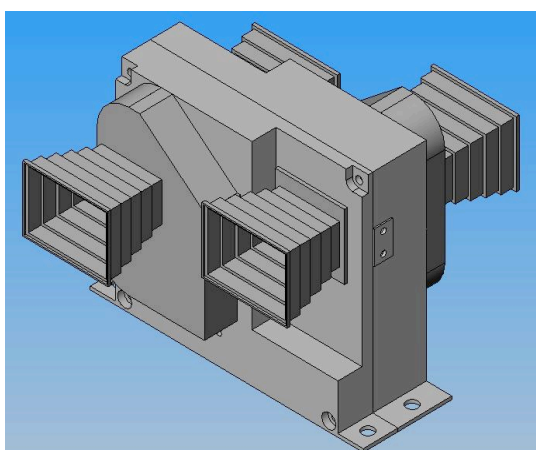

Figure 6. The Solid State Telescope (SST)

4.4.3 Calibration

Absolute calibration points are determined by monitoring the highest energy of protons stopped and by placing the pairs (or triplets) of detectors in coincidence and monitoring the minimum ionizing energy for penetrating particles. Such practices have led to superb agreement between SST and ESA fluxes on WIND, and result to <10% absolute flux uncertainty. Inter-probe calibration will also be performed at times of low plasma sheet activity, when the flux anisotropy is low.

4.4.4 Attenuator Operation

The SST attenuator is controlled by the IDPU. It will be operated when a probe approaches the radiation belts based on measured flux levels. Sufficient (~10min) hysteresis is built into the design.

4.5 Search Coil Magnetometer

The SCM measures the 3D magnetic field in the frequency bandwidth from 1 Hz to 4 kHz. It will extend with appropriate sensitivity the measurements of the FGM beyond the 1 Hz range.

4.5.1 Science Requirements

The science requirements derive from the need to measure with appropriate sensitivity (<1 pT/√Hz @ 10 Hz): the cross-field current disruption waves (~0.1 fLH) at least as close to Earth as 8Re (fLH-60Hz).

4.5.2 Specifications

The SCM measures the variation of the magnetic flux threading three orthogonal high permeability μ–metal rods. The unit sensitivity is 0.5 pT/√Hz @ 10 Hz. A flux feedback loop is employed to ensure phase stability.

The signals from the three sensors are pre-amplified and then processed together with the EFI data at the IDPU.

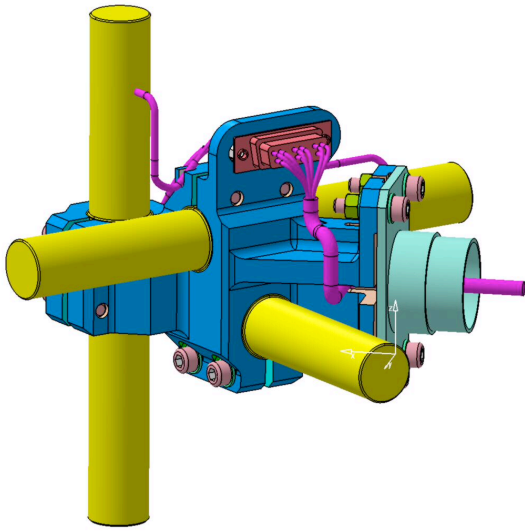

Figure 7. The Search Coil Magnetometer (SCM)

4.5.3 Calibration

Absolute amplitude and phase calibration takes place with calibration coils that create a known AC pseudo-random noise consisting of a series of discrete frequencies covering most of the bandwidth (10 Hz – 4 kHz). Calibration switch-on is commanded by the IDPU according to a pre-scheduled sequence.

4.5.4 Boom Deployment

See FGM boom deployment.

4.6 Electric Field Instrument (EFI)

The EFI measures the 3D electric field in the frequency range from DC to 300 KHz. The three-dimensional EFI experiment consists of 4 spin-plane spherical sensors each suspended on its own 20 mm deployable cable 20 meters away from the probe center. Two axial tubular sensors, each 1 m long, are mounted on a 4 m-long stacer element.

4.6.1 Science Requirements

Determine the time of onset at 8-10 Re by measuring:

1) The plasma pure convection motion, i.e., without the effects of diamagnetic drifts that ESA measurements are subject to.
2) The low frequency (T~1min) wave mode and pointing flux.

The inner probes will determine the axial component independently from the axial boom measurement and provide both a method for calibration of the axial measurement and a backup solution.

4.6.2 Specifications

Boom electronics located at the EFI housing perform stub and guard voltage control and sphere biasing. Signal processing takes place in the IDPU, together with the SCM. Routine waveforms (32 samples/s) or burst waveforms (128-8192 samples/s) are captured and processed just as for the SCM data. Spectral processing of the low frequency (< 8 kHz) data occurs in the DSP in a fashion identical to the SCM. The wire booms will be deployed with near real-time monitoring of a release and spin-up sequence, each lasting 1-2 hours/probe. Alternating between different THEMIS probes in science and sphere-release phase, mission-total EFI deployment lasts < 10 days.

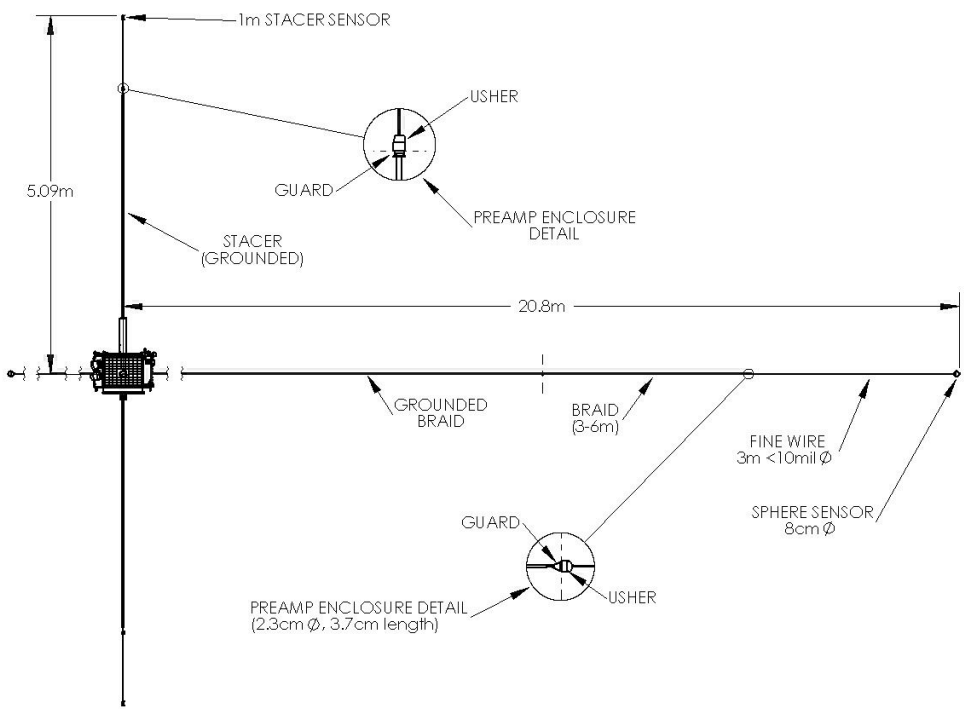

Figure 8. The Electric Field Instrument (EFI)

4.6.3 Calibration

The aforementioned individual probe calibration results in absolute DC measurement accuracy of 0.1 mV/m, i.e. <10% of the field value anticipated during fast flows. Increased confidence in the measurements will be obtained from inter-spacecraft calibration during quiet times.

4.6.4 Deployment Operations

The EFI requires operational commands to govern boom deployment and adjustment as well as science commands to control sensor bias voltages, data sample rates, filter settings, and spectral resolution control. As in previous missions, a typical mode can be specified with ~200 commands valid over a typical operational period of ~1 month once deployment and checkout phases have been completed.

Three phases:

1) Deployment alternatively extending the wire boom pair in predetermined increments. During radial wire boom deployment and at each stop, sphere potentials are monitored in order to characterize probe charging affects, plasma environment, and EFI status. After the radial boom deployment, the axial booms are each deployed to their final lengths using one initiator event per boom.
2) Checkout: Assuming nominal potential measurements and probe spin rate, the checkout phase begins with final adjustments in wire boom lengths to verify that each pair deployed symmetrically relative to the probe body. These occur in near real-time sessions, monitoring the release and spin-up sequence, each lasting 1-2 hours/probe. Alternating between different THEMIS probes in science data collection and sphere-release phase, mission-total EFI deployment lasts < 10 days. After boom deployment, an EFI early-checkout phase begins in which the photo-currents are characterized and the guards, stubs, and bias adjusted accordingly, requiring a new command load roughly once per week, per probe. Science quality data are returned during this phase which lasts ~1 month.
3) During the nominal science phase, the EFI is configured roughly once each month through a command sequence.

4.7 Instrument Data Processing Unit (IDPU)

This unit is the heart of the instrument package: it provides instrument power, controls instrument functions, receives instrument commands and obtains housekeeping and science data, stores and processes the data and transmits data to the probe bus electronics. It is the interface between the instrument sensors and the probe BAU. The IDPU uses an 8085 processor and 256 Mbytes of memory to store science data.

The IDPU collects, compresses, and stores instrument data and transmits the data to the ground upon command with a nominal downlink rate of 524.288 kbps or 1,048.576 kbps. The command uplink protocol is a 1 kbps, COP-1 compliant system, with commands relayed by the bus processor. Instrument data are yielded to the IDPU at continuous rates governed by the overall system mode (survey, particle burst, wave burst I or II). The data format is 24-bits consisting of an 8-bit application process identifier (APID) followed by 16 bits of data. Data compression and complete packetization is performed by the processor, prior to storage in the IDPU memory. The IDPU-to-bus C&DH telemetry requirement is a 1 Mbps serial data stream. The IDPU can mix and prioritize engineering and science frames according to operational preferences at downlink time.

During nominal operation, the IDPU provides instrument housekeeping packets to the probe-BAU, which are combined with its data into CCSDS frames for downlink. Stored science data are transmitted separately after engineering data over the high-speed link to the BAU when commanded from the ground.

The IDPU is responsible for monitoring instrument science data and using pre-defined measurement quantities as criteria for the overall instrument data rates. Using a command upload table, the processor steers instrument quantities into a trigger buffer section of memory based on a trigger APID list. A real-

time evaluation of a single measurement level or weighted linear combinations of several measurements are compared to pre-set thresholds as criteria for survey, particle burst, or wave burst instrument rates.

Mode definition tables are large macros used by the IDPU to configure instruments appropriate to the region of space being examined. The IDPU will be programmed with a number of mode definitions that are selected by an ATS command or on-board triggering logic. Assuming 32 macros of 512 bytes each, a full reload would require 16 kbytes. ESA and SST Moment Tables are calculated by IDPU FSW at system startup and loaded into the ESA and SST moment circuitry. For contingency operations, these tables are also directly loadable from the ground. EFI biasing, FGM and SCM parameter modes are expected to be small and are included in the mode definitions.

4.8 Ground Observations

Ground observations and measurements will be made of the aurora and earth's magnetic field by two networks of instruments. The first will be 20 Ground Based Observatories (GBO's) spread across Alaska (4) and Canada (16). The GBO's will contain All Sky Imagers (ASI) and Ground Magnetometers (GMAGs). The second network will be 10 Education and Public Outreach (E/PO) GMAGs located in schools at sub-auroral latitudes in the U.S. The locations of both networks are shown below in Figure 9.

4.8.1 Ground Based Observatories (GBO)

The THEMIS mission times substorm signatures on the ground and in space with a time resolution of better than 30 seconds. The comprehensive THEMIS approach to solving the substorm problem calls for monitoring the night side auroral oval with fast (<1s exposures), low cost, and robust white-light All Sky Imagers (ASI) and high-time resolution (1s) Ground Magnetometers (GMAGS). These instruments will produce auroral images and Earth magnetic field measurements. In addition to the ASI and GMAG data, the GBO will produce health and safety data for evaluating the status of the site. The ASI's are provided by UCB and the GMAGs are supplied by UCLA. GBO locations are shown below in Figure 9.

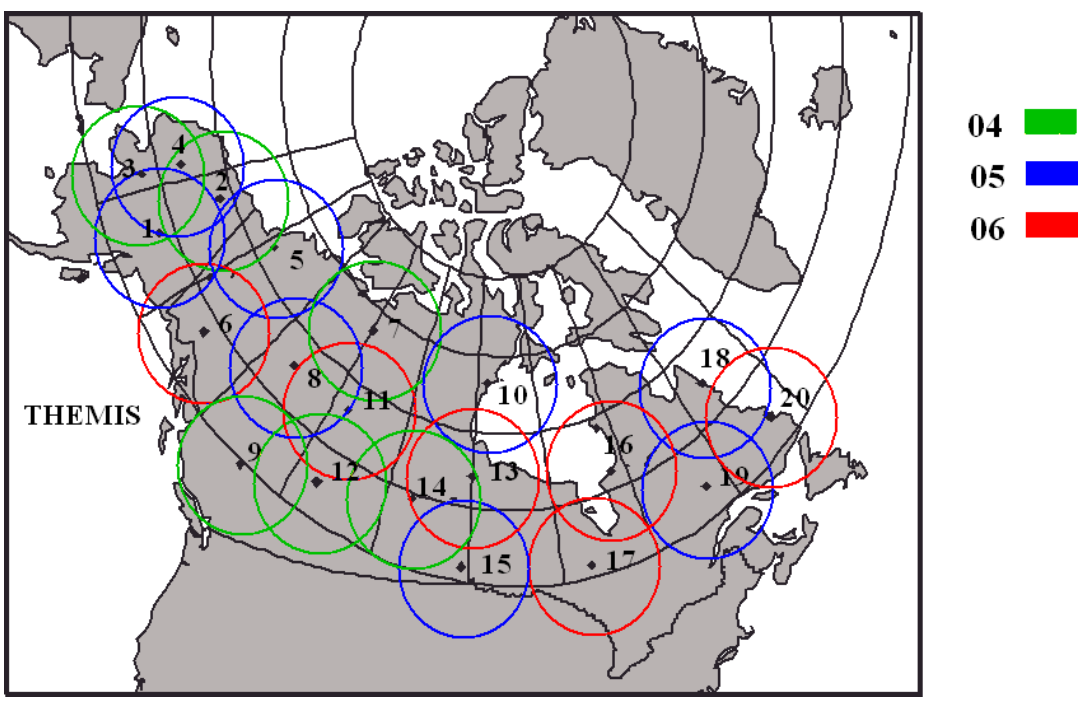

Figure 9. Ground Based Observatory (GBO) Locations

Some of the GBO's will take advantage of infrastructure and instrumentation which are part of existing ground based networks. Each of the 20 sites will house a UCB ASI, however, only 10 sites will house a UCLA GMAG. Two of the Alaska sites will rely on magnetometers supplied and operated by the Geophysical Institute at the University of Alaska, Fairbanks. The remaining 8 sites in Canada will rely on magnetometers supplied and operated by Canadian Geospace Monitoring (CGSM) and Natural Resources Canada (NRCAN). Table 2 lists the type of magnetometer at each site as well as the geographic coordinates.

No.	Site	Abbrev.	Location	Geographic Latitude	Geographic Longitude	GMAG type
1	Gakona	GAK	USA	62.4	214.8	GI & GPS5
2	Fort Yukon	FYU	USA	67	199.6	GI & GPS1
3	Mcgrath	MCGR	USA	63	204.4	GMAG1
4	Kiana	KIA	USA	66.6	214.7	GMAG4
5	Inuvik	INUV	Canada	68.3	226.7	CGSM&GPS4
6	White Horse	WHOR	Canada	60.7	224.9	GMAG7
7	Lac de Gras	LGRA	Canada	64.6	250	GMAG2
8	Fort Simpson	FSIM	Canada	61.8	238.8	CGSM&GPS3
9	Prince George	PGEO	Canada	53.9	237.4	GMAG-Proto
10	Rankin Inlet	RANK	Canada	62.8	267.9	CGSM&GPS6
11	Fort Smith	FSMI	Canada	60	248.1	CGSM&GPS6
12	Athabasca	ATHA	Canada	54.7	246.7	NRCan&GPS2
13	Gillam	GILL	Canada	56.4	265.4	CGSM&GPS9
14	The Pas	TPAS	Canada	54	259	GMAG3
15	Pinawa	PINA	Canada	50.3	264	CGSM&GPS7
16	PBQ	PBQ	Canada	55.3	292.3	NRCan&GPS10
17	Kapuskasing	KAPU	Canada	49.4	277.6	GMAG9
18	Nain	NAIN	Canada	56.5	298.3	GMAG5
19	Gangon	GANG	Canada	51.9	291.8	GMAG6
20	Goose Bay	GBAY	Canada	53.3	299.6	GMAG8

Table 4. GBO Information

Figure 10 shows the major components of the GBO. The Computer System Enclosure (CSE) consists of an external insulated environmental enclosure and an internal rack mount. The rack mount will contain the system computer, hot swappable hard drive, GMAG interface electronics, Power Control Unit (PCU), CD10X Datalogger and battery, ASI power supply, and an Uninterruptible Power Supply (UPS).

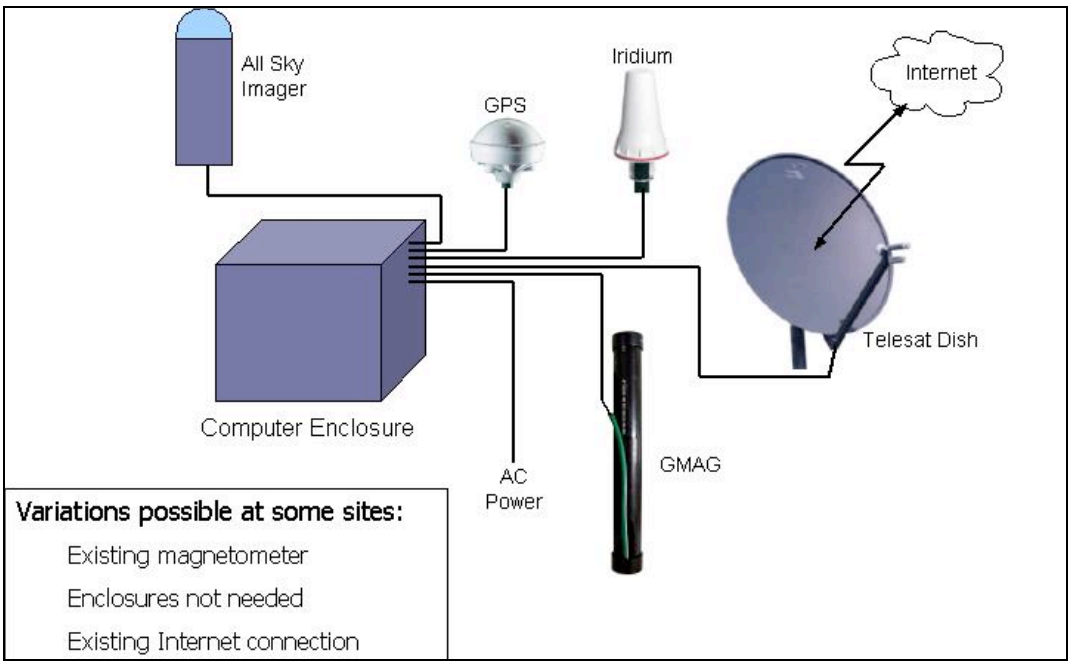

Figure 10. GBO Components

The CSE will operate under external ambient temperatures of –50 degrees C to 40 degrees C. It provides a dust free method of cooling via a solid state air conditioner and heating via small space heaters (see Figure 11). It provides access for external cables, maintenance, hot swapping of hard drives.

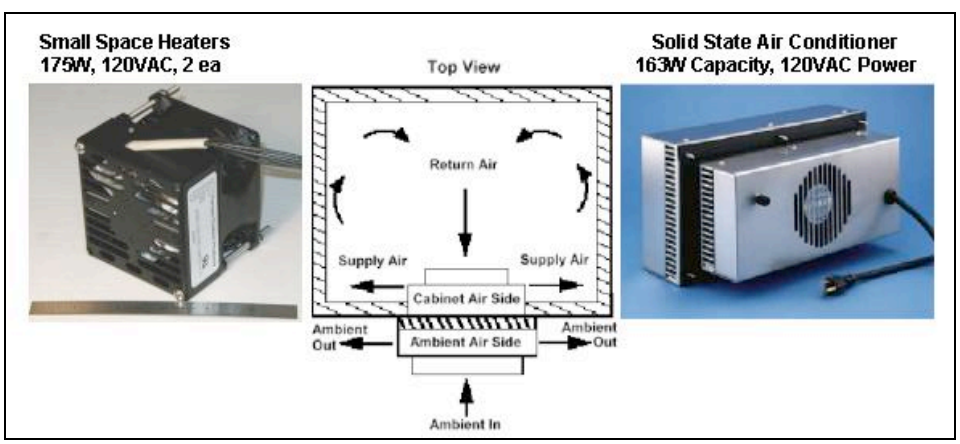

Figure 11. GBO CSE Heating and Cooling

The PCU provides control of both temperature and instrument power. The temperature in the CSE and ASI will be maintained at 20 degrees Celsius +/- 10 degrees Celsius. Also, the PCU provides a graceful shutdown of the system computer in the event of a loss of power or temperature.

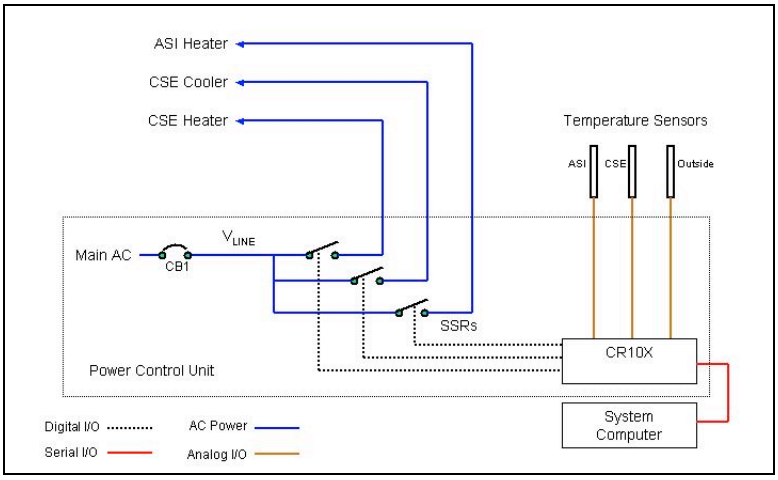

Figure 12. GBO PCU

The CR10X Datalogger is a "smart" controller with simple programming and data logging capability, and takes the place of a regular thermostat. It provides analog and digital I/O for the system computer, and is always operating and always accessible for re-programming via the internet or Iridium modem. It has an extended operating range of –55 degrees Celsius to 85 degrees Celsius. Due to lower power consumption, it can operate for months on battery power.

Remote access to the GBO's will typically be through an internet connection made possible by one of the following:

- Hardwired using a local LAN connection
- Telesat HSi (Canada) or Starband 480 (Alaska)
  - Can provide fixed IP address
  - Minimum 10 kbps uplink rate
- Backup connection via an Iridium modem
  - 2400 bps

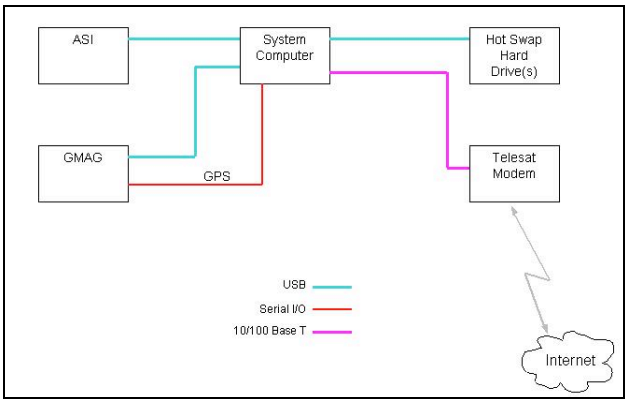

Figure 13. Prime Data Communications Link

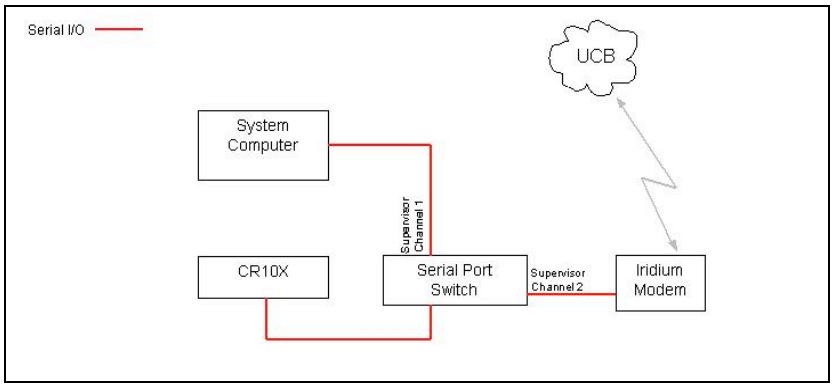

Figure 14. Backup Data Communications Link

4.8.1.1 All Sky Imagers (ASI)

The ASI design uses commercially available components, and is based on heritage ASI's used at AGO sites in Antarctica. The basic components include a Charged Couple Device (CCD) camera and an all sky (fish-eye) lens (Figure 15).

Figure 15. All Sky Imager (ASI)

The ASI is housed in a heated environmental enclosure topped with a polycarbonate/acrylic dome (Figure 16). The enclosure is hermetically sealed with a nitrogen purge. The enclosure is designed to operate with external ambient temperatures in the range of –50 degrees Celsius to 40 degrees Celsius. The internal temperature is maintained at 20 degrees Celsius, +/- 10 degrees Celsius

.

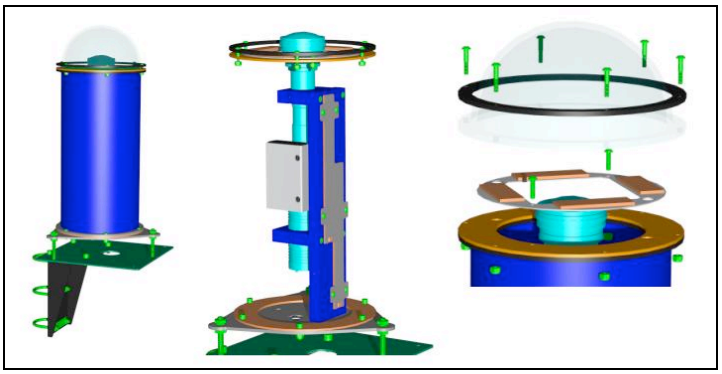

Figure 16. ASI Mounting and Enclosure

An internal sun shield will protect the ASI UV radiation damage during non-operation periods (figure 17).

Figure 17. ASI Sun Shield

4.8.1.2 Ground Magnetometers (GBO-GMAGs)

There are 10 GBO's (2 in Alaska, 8 in Canada) that will house Ground Magnetometers (GMAGs) developed by UCLA. These units are also referred to as Fluxgate Magnetometers. The GMAGs are small, low power units, and have a ruggedized all weather sensor design. The GMAG processor card is located in the CSE and has a USB interface for data retrieval and firmware uploads.

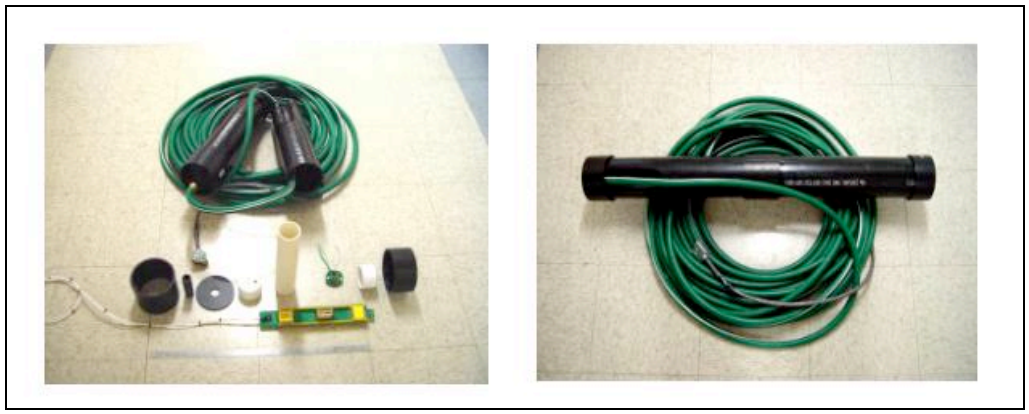

Figure 18. GMAG Sensor

The sensor has a +/-72KnT dynamic range @ 0.01nT resolution, and will produce 2 vectors per second. Each vector consists of three quantities: Bx, By, and Bz, which are measurements of the magnetic field strength along each axis. The data output is expected to be 86.4 kbytes/hour with approximately 100 bytes/hour for housekeeping and log data. The raw magnetometer data are recorded in raw format, and calibration is applied when products are compiled for distribution. Data are recovered with the ASI data.

4.8.1.3 Health & Safety - System Status

The GBO will log approximately 10 kbytes of health and safety data every 5 minutes, or 100 kbytes/hour. Essential information is recorded at a much lower rate, approximately 20 bps, yielding a data volume of 10 Kbytes/hour.

4.8.2 E/PO Ground Magnetometers (E/PO-GMAGS)

UCLA will also build and install 10 additional GMAGs in selected K-12 schools located in sub-auroral latitudes in the U.S. (blue dots in figure 9). The UCB Education and Public Outreach (E/PO) group will manage this effort in order to promote inquiry-based and theme-based instruction as well as allow hands-on student participation.

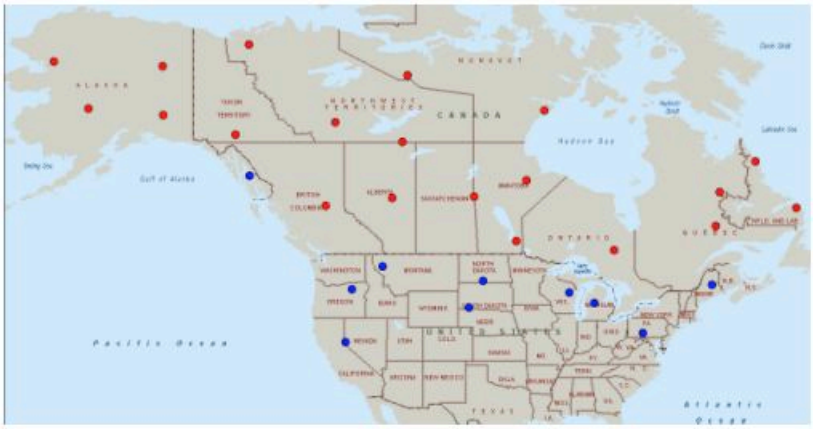

Petersburg City Schools: *Carolyn Enge*	**Petersburg, Alaska**
Chippewa Hills High School: *Cris DeWolf*	**Remus, Michigan**
Hot Springs High School: *Sean Estill*	**Hot Springs, Montana**
Western Nevada Community College: *Robert Collier*	**Carson City, Nevada**
Fort Yates Public School: *Daryl Brahos*	**Fort Yates, North Dakota**
Ukiah School: *Rob Batease*	**Ukiah, Oregon**
Northern Bedford County High School: *Keith Little*	**Loysburg, Pennsylvania**
Red Cloud High School: *Wendell Gehman*	**Pine Ridge, South Dakota**
Shawano Community High School: *Wendy Esch*	**Shawano, Wisconsin**
North County Union Jr. High School: *Holly Willey*	**Vermont**

Figure 19. E/PO GMAG Locations

ASCII conversion routines will process the raw magnetometer data at the sites. Working with E/PO personnel, students and teachers will use standard Windows software packages (Excel import of ASCII data) to view and analyze data. Web-based download functions will make the data accessible to other schools and the general public. Data will also be copied to UCLA and UCB. At UCB, the data will be integrated into the data access and retrieval system as well as folded into the summary plot production system.

5. Ground Data System (GDS) Description

5.1 Overview

The THEMIS GDS consists of several functional segments: The Ground Stations (GS) to communicate with the probes on-orbit, the Mission Operations Center (MOC) for probe telemetry and command control, the Flight Dynamics Center (FDC) for probe orbit and attitude determination, and the Science Operations Center (SOC) for instrument data collection, processing, archiving, and distribution functions as well as planning and generating commands for instrument operations. The Berkeley Ground Station (BGS), MOC, FDC, and SOC are all co-located at the Space Sciences Laboratory on the UCB campus. A general description of each GDS segment is given below as well as their operational responsibility.

5.2 Ground Stations

5.2.1 Berkeley Ground Station (BGS)

The primary ground station for THEMIS is the Berkeley Ground Station (BGS). The BGS employs front-end processors for bit synchronization, Viterbi decoding, frame synchronization, Reed-Solomon decoding, and CCSDS channel routing. Data streams that carry real-time engineering and science data are routed directly into the MOC for real-time state-of-health monitoring and control functions. In addition, all received telemetry data are stored locally at the ground station in separate files for each virtual channel and are automatically transferred to the MOC and SOC via FTP once the support is complete.

Commanding of the probes is initiated from the ITOS workstations in the MOC and follows standard CCSDS procedures [1]. Individual commands or entire command loads are divided up into CLTUs and are forwarded to the front-end processors via secure TCP/IP network socket connections. The command data stream is then transmitted in real-time at a rate of 1 kbps and BPSK modulated onto a 16-kHz subcarrier. The subcarrier is in turn PM modulated onto the RF carrier with a modulation index of 1.0 rad. The CCSDS COP-1 protocol is used to verify command reception on the probe. Once a command is transmitted to the probe, ITOS monitors the Command Link Control Word (CLCW) that is attached to each telemetry frame, indicating the command verification status on-board the probe. ITOS automatically initiates retransmission of commands that are not verified.

Each probe contains a coherent STDN compatible transponder, thus allowing two-way Doppler ranging for accurate orbit determination. All probes use the same frequency pair for telemetry and commanding. Communications are established with one probe at a time.

5.2.2 Secondary and Backup Ground Stations

Secondary ground station support will be provided by NASA/GN stations WGS 11-m, MILA 9-m, AGO 9-m, and HBK 10-m. TDRSS support is baselined for the Launch and Early Orbit (L&EO) phase of the mission to monitor probe release, aid in maneuver operations, and recovery from anomalous conditions.

Real-time telemetry and command data are carried between the ground station and MOC via a T1 line. Telemetry data stored on the ground are transferred to the MOC and SOC via the open Internet. During Launch and Early Orbit (L&EO) operations, TDRSS S-Band Single Access (SSA) mode allows communications with each of the probes at a low data rate at times when the individual probes are within communications range of a TDRS spacecraft.

Pass schedule requests generated by the MOC are submitted to the respective scheduling office associated with each ground station network. Confirmed pass schedules are used to perform mission planning and build command loads. All real-time command and telemetry connections between the MOC and ground

stations are carried over secure network links. Tracking data are transferred from all ground stations to the FDC to perform orbit determination in order to generate updated ephemeris products. Attitude sensor data received from the probes through the MOC are routed to the FDC to obtain ground based attitude solutions. Once verified, ephemeris products and attitude solutions are used to plan orbit maneuvers.

5.2.3 Telemetry Files

The ground station telemetry file transfer protocols and file formats are listed in reference document [4]. The file naming convention is listed below:

Telemetry File Naming Conventions:

Format:

- FACILITY.PROBE_BUS_NAME.TLM_VCN.YYYY_DDD_HHMMSS.dat

Examples:

- BGS.THEMIS_A.TLM_VC0.2007_028_060312.dat
- WGS.THEMIS_B.TLM_VC1.2007_029_012031.dat
- MIL.THEMIS_C.TLM_VC2.2007_038_102319.dat
- AGO.THEMIS_D.TLM_VC3.2007_032_151745.dat
- HBK.THEMIS_E.TLM_VC6.2007_034_234512.dat
- WSC.THEMIS_A.TLM_VC0.2006_301_001834.dat

5.3 Mission Operations Center (MOC)

The THEMIS Mission Operations Center (MOC) will perform mission planning functions, commanding, and state of health monitoring of the 5 probes, recovery of science and engineering data, data trending and anomaly resolution. The UCB Flight Operations Team (FOT) will carry out these activities.

5.3.1 Mission Operations

5.3.1.1 Overview

The main operational modes or phases include Pre-Launch, Launch and Early Orbit (L&EO), Nominal Science Operations, Maneuvers, and End-of-Mission. The probes are powered with the receiver on during Pre-Launch and L&EO modes with all deployable appendages stowed during the Probe Carrier (PC) dispense operation. The probes are passively spin-stabilized upon release (even under dispense fault conditions) and full command and telemetry operations commence, initiated by ground command, to each probe using unique identification codes. Deployment of all booms, checkout, and power-up of each instrument is accomplished at the appropriate stages of the In-orbit Checkout (IOC) phase (part of L&EO) to verify key instrument functions and extract body (FGM), sheath (EFI), and field (SCM) calibration data for each unique configuration during these deployments. This allows for independent decoupling and characterization of the probe body effects for use in subsequent science data analysis. While all probes are self-sufficient the FDC will carry out orbit and attitude determination using the Berkeley Flight Dynamics System (BFDS). All maneuvers will take place during a ground station contact. A passively spin-stabilized control scheme, 4π steradian power positive body-mounted solar panels and a near omni directional communications coverage allow any probe to fail-safe with no required maneuvers.

5.3.1.2 Pre-launch, Launch and Early Orbit (L&EO) Operations

Pre-launch operations include end-to-end data flow tests, rehearsals, and full mission simulations, integrating and operating all of the GDS elements. During the launch sequence the Delta II injects the PCA into the target insertion orbit, initiating the release of the probes from the PCA. At this time operational command and control authority transitions from the LV controllers to the MOC at UCB. Subsequently each probe is polled via ground station contacts in a round-robin scheme to evaluate state-of-health and to obtain

telemetry and tracking data for initial orbit and attitude determination. Once the orbits are well established, the MOC generates the first set of command loads that are uplinked to each probe. Further on-orbit checkout commences with deployment of the FGM/SCM magnetometer booms, which undergo a simultaneous deploy, followed by the power up sequence of all science instruments. As soon as all probes are checked out, the final designation of probe constellation IDs, i.e. P1, P2, P3, P4 and P5 is performed based on functional test results and magnetic signature levels. This scheme allows for implementation of mission redundancy and a probe replacement strategy that minimizes impact from off-nominal science instrument performance.

Final orbit injection begins after all probes are re-spun to a spin rate of 20 rpm. Calibration of the tangential thrusters is part of the re-spin sequence. The orbits of each probe are then adjusted in one (P3-P5) or two (P1-P2) discrete pairs of apogee and perigee maneuvers, using the axial thrusters. Each individual maneuver is followed by accurate orbit and attitude determination, allowing for a calibration of the axial thrusters. Proper thruster firing is verified in real-time by monitoring telemetry data from the RCS temperature sensors, tank pressure gauges, and attitude sensors. Once placed in their final mission orbits, the probes are commanded to deploy the radial EFI wire booms and subsequently the axial EFI booms. Calibration measurements of the probe potentials are performed as part of the step-by-step deploy sequence. Once the radial wire booms have been deployed, the EFI axial-boom pair undergoes a simultaneous deploy. Finally, the spin rate on all probes is adjusted to 20 rpm.

5.3.1.3 Normal Operations

Normal operations begin with preparation for the conjunction season. During normal operations, communications with each probe are established at least once per day via the primary ground station (BGS) to monitor the probe health and safety, to recover stored engineering data, and to collect tracking data for precise orbit determination.

Science data are stored on-board and are transmitted to the primary or secondary ground station during a 15-30 min pass near perigee. Data transmissions are initiated by time sequence commands stored on-board each probe. These commands are part of an Absolute Time Sequence (ATS) load generated individually for each probe using the Mission Planning System (MPS). ATS loads are uploaded several times per week and cover at least 8 days for P1, 4 days for P2, and 3 days for P3, P4, and P5. The ground stations will transfer to the MOC health and safety data in real-time (VC0) as well as a subset of science data (VC2) for monitoring instrument performance. Stored engineering (VC1) and science (VC3) data are saved in files and are delivered post-pass to the MOC and the SOC.

During normal operations, the orbits of P1, P2, and P5 are adjusted in a few (2-4/year depending on probe) intervals to optimize conjunctions. These short duration adjustments are nominally performed with side thrusting. Additionally, orbit maneuvers are performed once per year with P1 and P2 to compensate the lunar perturbations on inclination, thus avoiding long shadow periods while optimizing science conjunction time. These longer duration burns for P1 and P2 take place outside the main science season and are performed with axial thrusting.

The Berkeley Emergency & Anomaly Response System (BEARS) is used to contact FOT members if probe/instrument telemetry out-of-limits conditions are detected or other GDS conditions arise that require immediate attention. The BEARS will parse through log files generated by ITOS during real-time passes and playback of stored engineering data, and automatically checks for yellow and red telemetry limit violations. The BEARS will also act on email warning messages sent to it from other GDS elements. If a limit violation or other GDS anomaly is detected, on-call FOT members are alerted via 2-way email pagers in order to access and resolve the problem.

5.3.1.4 End of Mission

After the second year of operations the probes will be positioned for re-entry course.

5.4 Flight Dynamics Center (FDC)

5.4.1 Overview

The FDC is responsible for supporting all orbit dynamics and maneuver functions, such as generation of ephemeris and mission planning products, orbit determination, ACS sensor calibration, attitude determination, maneuver planning, and analysis and calibration of thruster performance.

5.4.2 Software Tools

Four major software tools are used to generate all ephemeris and mission planning products, perform orbit and attitude determination, and carry out maneuver planning functions. These tools are the Goddard Trajectory Determination System (GTDS), the General Maneuver Program (GMAN), and the Multi-mission Spin Axis Stabilized Spacecraft (MSASS) attitude determination systems were all developed at GSFC. SatTrack is a Commercial-off-the-Shelf (COTS) product. Probe conjunction analysis is accomplished with a combination of GTDS and an Interactive Data Language (IDL) based software library that was developed in-house at SSL.

5.4.3 Operations

The four major functions of these software tools are described below:

5.4.3.1 Orbit Determination

GTDS performs high-precision orbit propagation and orbit determination functions for THEMIS. For orbit-determination, GTDS ingests two-way Doppler tracking data collected from the ground stations in UTDF format. These tracking data are obtained during regular science data transmissions at ranges of 30,000 km or less, and during additional passes at other parts of the orbit for each probe. GTDS estimates new state vectors for the five probes and generates an updated ephemeris. Once state vectors have been updated, new mission planning products are generated, and the updated vectors are distributed to the ground stations to generate new acquisition angles for upcoming pass supports. Routine NORAD orbit determination using radar tracking data provides a back up for the primary orbit determination.

5.4.3.2 Mission Planning Products

Mission planning products are generated by SatTrack based on GTDS ephemeris output. These include ground station view periods, link access periods, eclipse entry and exit times, and other orbit events required as input to MPS. Other tools in the SatTrack software suite distribute real-time event messages to various ground system elements such as ITOS and the BGS in a fully autonomous client/server network environment

5.4.3.3 Attitude Determination

Ground based attitude determination of the probes utilizes MSASS to ingest raw sensor data from the telemetry stream that are converted into vectors expressed in spacecraft body coordinates. The suite of attitude sensors on each probe comprises a V-slit sun sensor, two mini-gyros, and the dual-use three-axis FGM. FGM data are utilized during the near-Earth portion of the probe orbits to cross-calibrate the other sensors. Reference vectors for conversion from the body frame to the inertial frame are obtained from the spacecraft, solar, lunar, and planetary ephemeris, and from the most current International Geophysical Reference Model (IGRF) of Earth's magnetic field. Based on these inputs, the MSASS estimator determines the inertial attitude vector at any given time for each probe.

5.4.3.4 Maneuver Planning

The GMAN tool performs all maneuver planning functions. Based on probe propulsion plus current and target state vectors, GMAN generates an optimized mission profile that includes spin-axis reorientation and

orbit adjustment maneuvers with coast periods between thruster firings. A typical maneuver scenario includes a reorientation of the probe from its mission attitude to the orbit maneuver attitude, followed by the orbit maneuver itself and the reorientation maneuver returning attitude back to nominal. Attitude reorientation maneuvers may be performed near perigee to take advantage of the magnetometer data that allow for independent confirmation of the correct attitude for the subsequent orbit maneuver. Orbit maneuvers are executed near perigee and apogee for operational mission orbit insertion and periodic orbit maintenance. Maneuver planning functions are performed at the FDC in consultation with GSFC/FDAB.

5.5 Flight Operations Team (FOT)

The MOC, FDC, and BGS systems are controlled and maintained by the UCB operations personnel. In the MOC, the Flight Operations Team (FOT) uses the Integrated Test and Operations System (ITOS) for probe command, control, and Health and Safety (H&S) monitoring. The use of ITOS from I&T through on-orbit operations allows FOT members to be trained in bus and instrument operations early on, facilitating a smooth transition from I&T to normal operations.

5.6 Science Operations Center (SOC)

5.6.1 Overview

The THEMIS Science Operations Center (SOC) is responsible for Probe and GBO instrument data collection, processing, archiving, and distribution functions as well as planning and generating commands for instrument operations. The SOC works closely with the co-located MOC to guarantee a seamless transfer and processing of probe instrument telemetry data, and proper control and configuration of the instruments. The SOC will work with the GBO team in a similar fashion.

6. Project Data Flow

6.1 Overview

The following sections detail the flow of THEMIS Project Data from probe and GBO instrument collection through ground processing and product production and availability.

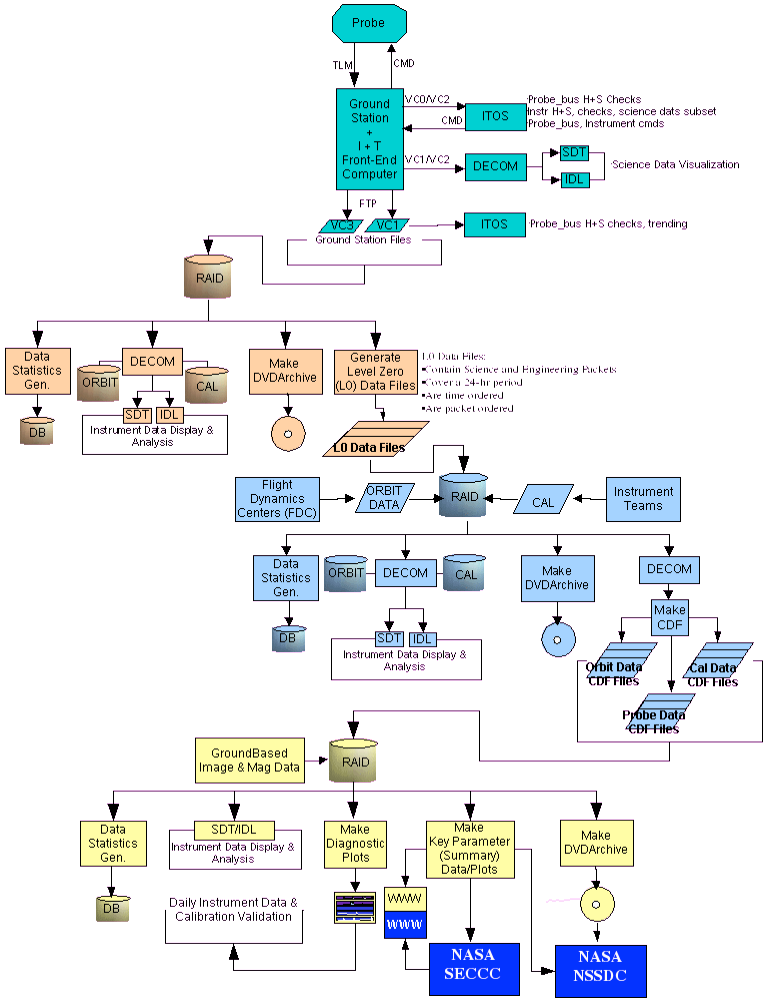

Figure 20. THEMIS SOC Data Flow

6.2 Probe Instrument Data

Figure 14 and 15 detail the major processing steps and timeline associated with the probe instrument data and the products produced from them. Please refer to them while reading the following sections.

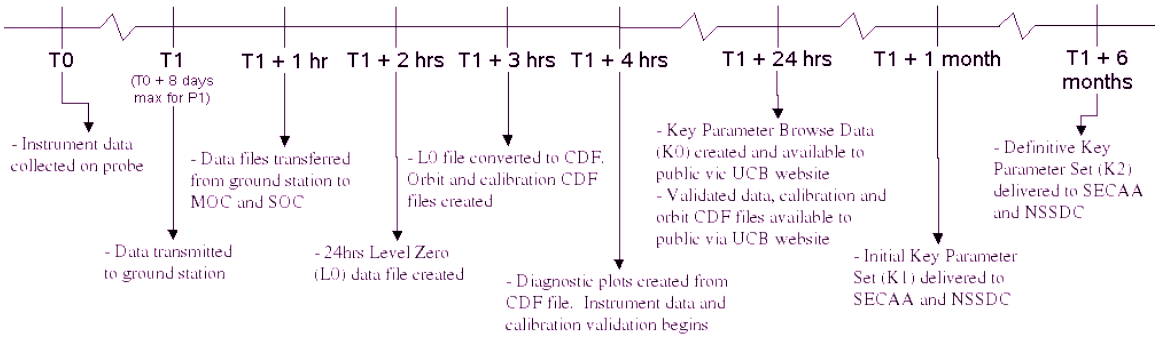

Figure 21. Instrument Data Collection and Processing Timeline

6.2.1 Collection – Time T0

The data flow begins with collection on board the probe. Collection rates vary based on orbital position and local plasma conditions. See Appendix B for details on the exact collection rates. The engineering data are stored as VC1, and science data as VC3.

6.2.2 Recovery – Time T1 (T0+8 Days Maximum)

The stored engineering and science data (VC1 and VC3) are transmitted to the ground during a 15 to 30 minute long ground station contact near perigee. After data have been collected on the spacecraft, it could take up to 8 days to recover a complete orbits worth of data. This takes into account the probe with the longest orbit period (P1 -> 4 days), the number of instrument data transmissions per orbit (1 transmission per orbit for P1), and the maximum number of transmissions it might take to recover the full orbit (2 transmissions for P1).

In addition to the stored data, the probe will transmit real-time engineering data (VC0) and a subset of the science data (VC2). The transmission of the data is controlled by stored commands the FOT had previously loaded and/or ground command. The ground stations transfer the VC0 and VC2 to the MOC in real-time. All VCs are saved in files and are delivered to the MOC and the SOC approximately 1 hour after the end of the ground station contact.

VC2 will contain a subset of the instrument science data in real-time, which will be useful during Integration and Testing (I&T) and Launch and Early Orbit (L&EO) operations when the instruments will be heavily tested and configured for normal operations. Also, VC2 will give the FOT an additional avenue for checking that instruments are operating properly on a day-to-day basis. The VC0 and VC2 data will undergo limit checking by ITOS and will be archived to files that will be available for post-pass processing. The results of the limit checking are recorded to a file and passed on to the BEARS for error detection and personnel notification.

6.2.3 Delivery to SOC – T1+1Hr

At approximately 1 hour after the completion of the ground station contact, the VC1 and VC3 files will be sent via FTP to the SOC. The VC1 file is also sent to the MOC where it is processed automatically by an ITOS workstation for back-orbit limit checking. Corresponding log files are passed to BEARS for error detection and operator notification. The reception of the VC files at the SOC will initiate autonomous processing of the data. This includes data quality checks and statistics generation to determine if data gaps have occurred both within files and between prior data transmissions. Also, these data files will be immediately available to data analysis tools (SDT and IDL routines) used to thoroughly checkout

instrument operation during I&T and the L&EO instrument turn on and commissioning phase. The VC files will remain accessible from hard-drive and are backed up on to DVD.

6.2.4 Level Zero Processing – Time T1+2Hrs

Following the initial quality checks and statistics generation, the data undergo Level Zero Processing, which includes sorting by Application (Packet) Identifier, time ordering, and then mapping the time ordered packets into 24 hour Level Zero (L0) data files. Each 24 hour L0 data file will contain all engineering and science (slow survey, fast survey, burst) collected during that period. The L0 files are stored locally, archived to DVD, and made available to data analysis tools.

6.2.5 CDF Processing – Time T1+3Hrs

Once a L0 file is created or updated, it will be converted into Common Data Format (CDF) or Level 1 (L1) data. Level 1 CDF files contain raw data from all instruments at the highest temporal resolution. Particle moments and distributions and field quantities are obtained by converting raw data into physical quantities using instrument calibration data

6.2.6 Diagnostic Plot Creation – T1+4Hrs

The completion of CDF processing will trigger the creation of instrument diagnostic plots (T1+4hrs). Each day the THEMIS Operations Scientist (Tohban) will review these plots in order to validate nominal operation and calibration of each instrument. This includes daily checks of (i) the overall data quality, (ii) housekeeping data trends (e.g., detector efficiencies and offsets) and (iii) identification and tabulation of geophysical events of special interest.

6.2.7 Browse/Key Parameter (K0) Data Creation – T1+24Hrs

The completion of CDF processing will also trigger the creation of Browse or Key Parameter (K0) Data which will be available to the public via the UCB website approximately 1 day after instrument data are initially received at the SOC (T1+24hrs). Space-based instrument key parameter data includes (all provided in physical units and at 3-s resolution):

- 3-D magnetic field, DC waveforms and AC spectrograms.
- 3-D electric field, DC waveforms and AC spectrograms.
- Core (10eV-40 keV) ion density and velocity moments, temperature and pressure tensor, energy spectrogram.
- Core (5 eV-30 keV) electron temperature and pressure tensor, energy spectrogram.
- Energetic ion and electron fluxes.
- Indications when burst data has been collected

The browse data are designed for monitoring the large-scale particle and field dynamics and for selecting time periods of interest. These data are created using IDL scripts provided by instrument investigators and are available as both plots (GIFS) and CDF files. They are not routinely checked for accuracy and are subject to revision as new data are received and/or updates to calibration and orbit data occur. Key parameter data associated with the GBO and E/PO ground based observations will also be produced.

6.2.8 K1 Data Creation – T1+1Month

At approximately 1 month (T1+1month) after data reception at the SOC, the first key parameter set (K1) is delivered to the Sun-Earth Connection Active Archive (SECAA) and the National Space Science Data Center (NSSDC) via the internet. This incorporates updates to data content, calibrations, and orbit data.

6.2.9 K2 Data Creation – T1+6Months

At approximately 6 months (T1+6months) after data reception at the SOC, the definitive key parameter set (K2) is delivered to SECAA and NSSDC.

6.3 GBO Data

In general, the University of Calgary (UC) shall serve as the primary data distribution hub for the UCB All Sky Imager (ASI) and UCLA Ground Magnetometer (GMAG) data, as well as the GBO health and safety (H&S) data. The University of Alberta (UA) will recover and process the CGSM and NRCan magnetometer data and make it available for download.

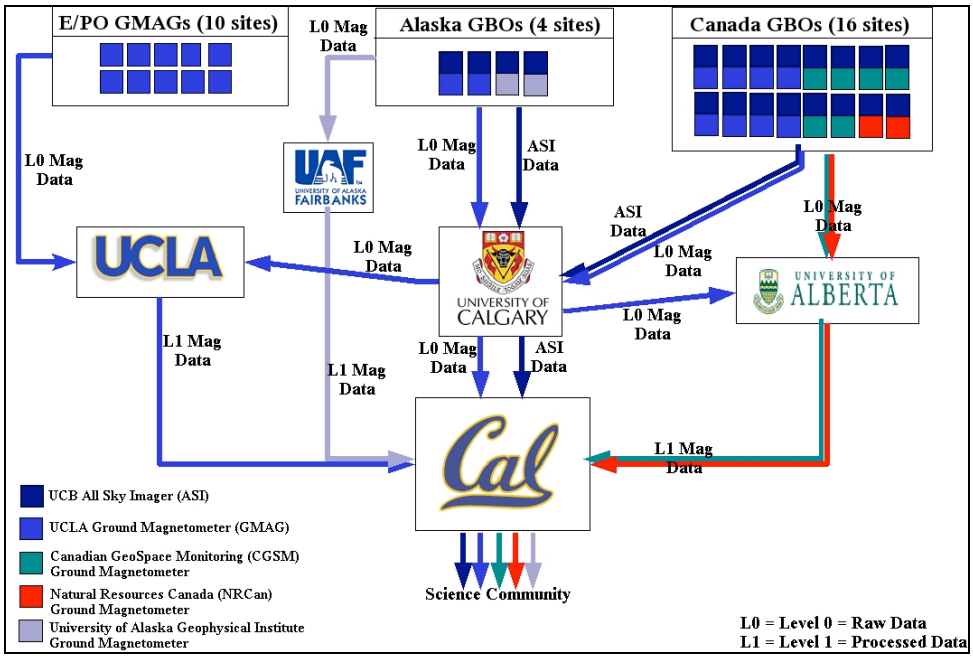

Figure 22. Ground Based Data Flow

6.3.1 Collection – Time T0

6.3.1.1 ASI Data

The ASI will produce full images (Stream2) in PNG format at a frequency of 1-image/5 seconds (nighttime only). Each image is made up of 256x256 16-bit values (pixels). PNG compression reduces this to 90 Kbytes/frame (70%). A 5-second frame rate will produce 150 kbps or 60 Mbytes/hour or 720 images/hour. For Stream 2, the expected data volume is **220-290 gigabytes/year/site uncompressed**.

Smaller, low resolution "thumbnail" images (Stream 1) in PGM format will be derived from the full images. Each thumbnail is comprised of 20x20 8-bit values (pixels) plus header information (roughly 50 bytes) for a total of ~450 bytes. GZIP compression reduces this to 270 bytes/frame (60%). A 5-second frame rate will produce 430 bps or 190 Kbytes/hour.

Stream 1 and 2 are stored locally on a hard drive connected to the system computer.

6.3.1.2 GMAG Data

The GMAG will generate 2 mag vectors every second. Each vector consists of three quantities: Bx, By, and Bz, which are measurements of the magnetic field strength along each axis. The data output is expected to be 86.4 Kbytes/hour.

GBO data collection is summarized in the table below.

Instrument	Collection Rate	Description
ASI	1 image every 5 seconds	**Stream 1**: "Thumbnail" low resolution image. 20x20 8-bit values (pixels) plus header information (roughly 50 bytes) for a total of ~450 bytes. PGM Format. **Stream 2**: Raw image frames. 256x256 16-bit values (pixels). PNG format.
GMAG	2 mag vectors every second	Each vector consists of three quantities: Bx, By, and Bz.

Table 5. GBO Data Acquisition

6.3.2 Thumbnail Image Recovery by UC – T0+1min

Stream 1 (thumbnail frames) is transmitted to UC daily and complies with the needs of THEMIS to determine the substorm onset to better than 0.5 hours in MLT. Primary means of stream 1 data retrieval is through the Internet provider Telesat HIs using a typical TCP/IP connection, with the expected throughput rate of 50 kbps. Stream 1 should arrive at UC within a few seconds of acquisition and be available for download after review and movement to central storage (~5minutes). A fraction of the high-resolution data (Stream 2) will be recovered with Stream 1 (<10%). An Iridium telephone backup is available for recovery of stream 1 and health and safety data as well as controlling GBO operations. The Iridium phone link operates at 2400 bps.

As soon as ASI data arrives at UC, it will also enter a sophisticated data access and retrieval system developed for NORSTAR's filter camera images and based on keogram summary plots (image North-South slices as a function of time). With this interactive system, a user calls up a customized summary of data from one or more stations.

6.3.3 Health and Safety (H&S) Data Recovery – T0+1min

Health and safety monitoring of sites will also occur over the Telesat Internet link as well as via a back link using an Iridium telephone. The H&S data will be available for review from the UC website. This will include the following items:

- CPU and motherboard temperatures, fan speeds
- Hard drive temperature, error rates
- Clock status (NTP)
- Network status
- Power status (UPS)
- Free disk space, memory
- Web-cam

6.3.4 Thumbnail Image Copied to UCB – T0+5mins

Once the stream 1 data is moved to central storage at UC it will be mirrored to UCB, where it will be available for download via the UCB website and incorporated into Browse Data.

6.3.5 Raw Magnetometer Data Recovered by UC and Copied to UCLA, UA, and UCB - T0+27hrs

The raw magnetometer data is saved to a file every hour, and these files will then be recovered by UC once per day. Once at UC, it will be copied to UCB, UCLA, and UA.

6.3.6 UCLA Produces Processed GMAG Data – T0+28hrs

Once UCLA acquires the raw mag data, it will convert it into a more easily used format. This processed data will be copied to UCB and UA.

6.3.7 Keogram Recovery and Distribution – T0+30Hrs

While the ASI is off (daytime), keograms will be created. These will be recovered and made available from the UC website. They will be copied to UCB where they will also be available via the UCB website.

6.3.8 Inclusion in Key Parameter Data – T0+30Hrs

The ASI and GMAG data will be included in the Key Parameter data beginning with the Browse data.

6.3.9 Recovery and Distribution of Full Resolution Images – T0+6Months

Full recovery of stream 2 data requires physically swapping out GBO hard drives and returning the units to UC for disk integrity and status checks and offloading of data to central storage. This will occur once or twice a year. The total image data volume (stream 2) amounts to **220-290 gigabytes/year/site uncompressed**. The full image data set will be copied to UCB.

6.4 E/PO GMAG Data

UCLA is responsible for collecting the raw GMAG data from the schools sites and processing the data into a more usable format for the science community.

6.4.1 Collection – Time T0

The E/PO GMAGS will collect data at the same frequency as the GBO GMAGS – 2 mag vectors per second.

6.4.2 Recovery – Time T0+27Hrs

UCLA will copy the raw GMAG data from the sites once per day. The raw data will be copied to UCB also.

6.4.3 Processed GMAG Data Produced and Distributed

UCLA will produce processed GMAG once the raw data is received which will then be copied to UCB and UA.

6.5 SPASE Collaboration

The THEMIS Project Data set will be described in the terms spelled out by the Space Physics Archive Search and Exchange (SPASE) data model, which is used by SEC. Much work has been done on the Virtual Solar Observatory (VSO) and Virtual Space Physics Observatory (VSPO) and Virtual Observatories in other areas are expected to be established in the near future as well. SPASE will be working with each of these groups to unify access within the whole of the space physics community.

7. Instrument Command and Control

7.1.1 Overview

The Flight Operation Team (FOT) carries out instrument command and control functions from the Mission Operations Center (MOC) under the direction of the PI and instrument Co-Is in consultation with pertinent subsystem engineers. Probe and instrument operation are reviewed and planned in weekly team meetings. One of the science team members assumes the rotating role of the scientist-on-duty (Tohban) who forms the point of contact between the THEMIS science team and the FOT. The Tohban is responsible for overseeing day-to-day science operations, including instrument configuration, data recovery and data processing.

Command and control of the instruments is separated into (4) different operational phases:

1. Instrument Commissioning (L&EO)
2. Normal Operations
3. Conjunction
4. Maneuvers

7.1.2 Instrument Commissioning

Instrument commissioning begins with the IDPU turn-on as soon as the probe power system is stable and temperatures are below maximum operating limits. From there the instruments are powered up and configured based on the THEMIS Launch and Early Orbit Operations Plan [6].

7.1.3 Normal Operations

The instruments will be operated in 4 basic science modes:

- Slow Survey (SS)
- Fast Survey (FS)
- Particle Burst (PB)
- Wave Burst (WB)

Selection of these modes is controlled by either stored commands or on-board triggers.

7.1.3.1 Slow Survey to Fast Survey

The transition between these two modes will be controlled by instrument commands in the probe Absolute Time Sequence (ATS) load. The load is built by the Mission Planning System (MPS) using the ITOS Command Database. The timing of the commands will be taken from a special ephemeris event file supplied by the FDC and ingested by the MPS.

7.1.3.2 Particle & Wave Burst Triggers

For the triggers, the IDPU FSW continuously samples science data in the SSR (e.g., ESA/SST Peak Flux, DFB V1-V6 voltages, FGM Bx-Bz) and evaluates the data at 1 spin resolution against a pre-loaded threshold value. When the threshold is exceeded, it then calculates a Quality value using 8 selectable functions and tags the resulting burst data collected with a value ranging from 0-255. This quality value decides whether the burst is kept or overwritten as subsequent bursts are collected. Also, the quality value determines the memory readout priority. The particle and wave burst trigger setting will be fine tuned early in the mission using ground commands to the IDPU.

7.1.3.3 Conjunction Operations

During conjunction season, the FOT will uplink predicted conjunction times to the IDPU. The FSW will increase the Quality evaluation near the conjunction. Also, conjunction duration and bias settings are configurable.

7.1.3.4 Maneuver Operations

During maneuvers the ESA high voltage will be disabled and the SST placed in attenuated mode.

The probe orbit placement is designed for maximum science return during the prime tail season, a four month period centered on February 21 of each year. Over the course of the mission, the orbits of P1 and P2 are optimized periodically by small orbit trim maneuvers to maximize conjunction time. Also, P1 and P2 undergo inclination change maneuvers to counteract lunar perturbations. The orbital period of P5 is changed from initially 4/5 days to 8/7 and 8/9 days to optimize dayside measurements during the first and second year, respectively. P3 and P4 remain in the same orbits throughout the mission. Fuel budgets for P3 and P4 allow these probes to replace P1 or P2 in the unlikely event of a probe loss.

After the second year of operations the probes are positioned for re-entry course. All maneuvers occur while in contact with a ground station with full a priori and a posteriori (near-real-time) attitude and orbit determination.

7.2 GBO Installation, Monitoring, Control, and Maintenance

Responsibilities for the various sites are shared between UCB, UC, UCLA, and UA. A breakdown of these responsibilities is listed below:

1. UC physically installs and maintains the Canadian GBO's.
2. UCB physically installs and maintains the Alaskan GBO's.
3. UC collects all GBO data (UCB ASI, UCLA GMAG, H&S) and GBO team (UCLA, UCB, UA) picks up data from UC.
4. UA recovers CGSM and NRCAN GMAG data. UCB picks up data from UA.
5. UC will have a notification system in place that will react to all high level GBO H&S issues. UCB acts in backup capacity for this role.
6. UC maintains the physical status and responds to H&S of the Canadian GBO's
7. UCB maintains the physical status and responds to H&S of the Alaskan GBO's
8. UCLA monitors the data quality of the GMAG data and directs UC to make any configuration or calibration changes. Changes are discussed and approved by GBO team.
9. UC monitors the quality of the Canadian ASI data. UC will make changes to instrument configuration/calibration after consulting with the GBO team (if the action is not already specified in the ops doc).
10. UCB monitors the quality of the Alaskan ASI data and directs UC to make changes to instrument configuration/calibration.
11. UCLA will recover the E/PO data. UCB picks up data from UCLA.
12. UCLA will validate data and respond to any H&S issues.

7.3 E/PO GMAG Control

UCLA will be responsible for the overall installation of the E/PO GMAGs. Site control, operation and data retrieval will be the responsibility of local schools under the guidance of UCLA and UCB. Depending on internet access, UCLA will perform configuration and software changes as necessary. The schoolteachers associated with each site will carry out a limited degree of maintenance of the units under the direction of UCB and UCLA E/PO personnel. Data collection will be the responsibility of UCB and a mirror site will be established at UCLA.

8. Science Data Products

UCB will receive and process probe instrument telemetry, GBO data, and E/PO GMAG data, producing a variety of data products that will be available to the projects scientists and the general public. These include:

- Instrument Data CDF Files
- Instrument Calibration CDF Files
- Key Parameter Data
- GBO ASI Data and Products
- GBO GMAG Data and Products
- E/PO GMAG Data and Products

8.1 Instrument Data CDF Files

The raw probe engineering and science data that has undergone level zero processing will be used to produce daily data CDF files. These files will contain all of the VC1 and VC3 data collected for a GMT day (00:00 – 23:59:59). These files are stored locally at UCB.

Directory Structure:

/data/cdf/probe_id/yyyy/mm/dd

File Naming Convention:

probe_id.yyyymmdd_sv_pv.cdf

where:

probe_id = THEMIS_A->THEMIS_E
yyyy = year
mm = month (01-12)
dd = day (01-31)
sv = Software version (00-99)
pv = Processing version (00-99)
cdf = Common Data Format

8.2 Instrument Data Calibration Files

Calibration files will exist for each instrument and will be used for processing the raw data quantities that are transmitted in VC3. The calibration files will be initially created based on ground based instrument testing and evaluation during I&T.

The following calibration files are planned:

1) **FGM Mounting Orthogonality and Gain**
2) **FGM Boom Angles**
3) **SCM Boom Angles**
4) **SCM Gains**
5) **ESA MCP Gains, one per anode for 16 anodes x 2 heads**
6) **SST Gains, 3 per telescope x 4 telescopes x 2 shutter conditions (open/closed**
7) **EFI 1 current and 3 voltages per sensor x 6 sensors**

A file will be produced for each day and will be associated with the data for that day. The calibration file naming convention and directory structure are listed below.

Directory Structure:

/data/cal/probe_id/yyyy/mm/dd

File naming convention:

probe_id.type.yyyymmdd.pv.cal

where:

probe_id = THEMIS_A -> THEMIS_B
type = calibration type (e.g., SSTG for SST Gains)
vv = processing version number
cal = calibration

Interprobe calibration will be performed in the early mission phase to confirm individual probe calibrations but will not be part of the data analysis efforts thereafter so as not to hold up data dissemination.

8.3 Key Parameter Data

Instrument, calibration, and orbit data CDFs, plus GBO and E/PO data, will be used to produce Key Parameter data products. The general categories are:

1) Keograms (GBO Image Data Overview)
2) Auroral Electrojet Indices (GBO Magnetometer Data Overview)
3) E/PO Ground Magnetometer Data Overview
4) P1 data (Probe Overview)
5) P2 data "
6) P3 data "
7) P4 data "
8) P5 data "
9) Mission Overview Plot

The probe overview data will include (all provided in physical units and at 3-s resolution):

- 3-D magnetic field, DC waveforms and AC spectrograms.
- 3-D electric field, DC waveforms and AC spectrograms.
- Core (10eV-40 keV) ion density and velocity moments, temperature and pressure tensor, energy spectrogram.
- Core (5 eV-30 keV) electron temperature and pressure tensor, energy spectrogram.
- Energetic ion and electron fluxes.
- Indications when burst data has been collected

All key parameter products will be available via the UCB website.

8.4 GBO Data and Products

UCB will receive the raw image, GMAG, and calibration data and will produce the following data products.

8.4.1 ASI

The ASI data and data products available at UCBerkeley will include the following:

- Image Thumbnail frames: 20x20 8-bit values (pixels) plus header information (roughly 50 bytes) for a total of ~450bytes. File format = PGM.
- Raw Image Frames: 256x256 16-bit values (pixels). Approximately 131 kbytes in size. File format = PNG
- Calibration files
- Keogram summary plots (latitude slice versus time - summary's of one or more stations)
- Composite global views providing both quick overview of data availability and a portal to data selection, decommutation, and analysis

UC will also produce its own ASI data product set which will be available from its own website. In addition to the raw image and calibration data, this will include:

- Site status info/plots
- Keograms (latitude slice versus time) for each site
- Merged intensity maps of all stream 1 data
- Merged maps of stream 2 data
- Estimates of visibility based on stars
- Estimates of arc location and orientation (when viewing is good)
- CDF for advanced data products
- raw ASCII and PNG/JPEG for availability lists and summary plots

8.4.2 GMAG

The GMAG data will include the following:

- L0 (Level 0) Raw Vector Data
- Calibration Files
- L1 (Level 1) Processed Data
- Auroral Electrojet Indices

Auroral Electrojet indices, already developed for Canopus, give similar, synoptic ground magnetometer information (similar to the presentation of NORSTAR data).

Both UA and UCLA will be producing their own GMAG data products that will be available at their own websites.

8.5 E/PO GMAG Data Products

When the E/PO GMAG data is received at UCB it will be used to produce Auroral Electrojet Indices similar to those produced using the GBO GMAG data. The data will also be folded into mission composite summary plots that will display probe, GBO, and E/PO GMAG data. UCLA will also be producing its own data product set.

- L0 (Level 0) Raw Vector Data

- Calibration Files
- L1 (Level 1) Processed Data
- Auroral Electrojet Indices

9. Data Access

Access to the THEMIS data and products will be through one of the following:

1. THEMIS Data Analysis Software Package File Search Tool
2. THEMIS Website

9.1 THEMIS Data Analysis Software Package File Search Tool

The File Search Tool (FST) is part of the Data Analysis Software Package which will be available for download from the THEMIS website. The FST will allow both internal and external users (with permission from PI) to query for instrument data and calibration CDF files and associated GBO and E/PO data based on probe ID, date, and time. The internal users will copy files over the Local Area Network (LAN) while external users will use secure FTP or COPY.

9.2 Website

The THEMIS website will allow users to query for instrument data and calibration CDF files, GBO ASI and GMAG raw and calibration files, E/PO GMAG raw and calibration files, and all of the associated data products.

10. Data Analysis Software

10.1 Overview

UCB will produce and make available a software package for accessing and processing the instrument data and calibration CDF files, GBO ASI and GMAG data, and the E/PO GMAG data. For instrument data, including slow survey, fast survey, and burst, science data analysis software exists in the form of an extensive library of IDL programs and the Science Data Tool (SDT) developed at SSL to analyze data from FAST, WIND, CLUSTER_II, and POLAR. The decommutator functions that allow access to the raw and CDF formatted data are adapted from those developed to for analysis of FAST science data. In general, four IDL-based software suites are planned:

1) Single probe analysis software, is directly transferable to THEMIS from FAST and WIND.
2) Multi-point data analysis software from ISTP and CLUSTER_II analysis to compute the flow shear/curl and pressure gradient along with their standard error will be directly implemented or modified for THEMIS
3) Ancillary Data Software. An existing distributed database of such data will be upgraded with IDL decommutators for plotting them seamlessly, relative to THEMIS quantities
4) Event Modeling. IDL codes that fly virtual probes within simulation run results under specific, idealized solar wind external conditions already exist. These will allow comparisons between models and observations.

For ASI and GMAG data, tools already exist for accessing, evaluating, and comparing the ground observatory data with the space-borne measurements. Data will be analyzed using standard IDL-Based routines developed from years of experience with NORSTAR and other AGO's.

The different software for accessing and analyzing the variety of data and data products will be integrated into one complete package that will be distributed to Co-Is and guest investigators throughout the mission as updates are made. Training sessions in the use of this software are planned. The software package will also be freely available from the UCB website.

10.2 File Search Tool

The file search tool will be available in both a command line and GUI form. The user will enter from 1 to 5 probe IDs and the time period of interest. The tool will initially check the users local directory for the data, and if not found will initiate a LAN copy or FTP session to download the data. In addition to requesting probe data, the user can request ASI and GMAG data for the same period. The user can also go down a basic directory path either locally or from the website and download data via local copy, remote copy, http, or ftp.

Once data is downloaded and available on the users workstation they can engage the second layer of data decommutation software and/or data analysis software described below.

10.3 Moments & Fields Tool

This tool will take data from CDF files and covert them into an ASCII file containing Density (N), Velocity (V), Temperature (T), Pressure (P), Mag field (Bxyz), Electric Field (Exyz), and Position (X,Y,Z). For the particle instruments, this tool will ingest the CDF file and produce an ASCII file that includes:

- N = Density
- V = Velocity
- T = Temperature
- P = Pressure

Partial ion density from the ESA: Niesa
Partial electron pressure from SST: Pesst

For the Fluxgate Magnetometer, this tool will produce:

- Bxyz

For the Electric Field Instrument, this tool will produce:

- Exyz

The filter banks from the EFI and SCM will both produce 8 quantities at spin resolution. The 8 quantities represent the electric field power in 8 frequency bins, as well as the magnetic field power in 8 freq bins.

10.4 Reading and Writing Tools

These include:

- Basic read routine
- Basic write routine
- Conversion routines like cdf2flat, cdf2asci, and cdf2cdf
- Processing routines
- Plotting routines like Specplot, dfplot, lineplot, tplot

11. Data Archiving and Distribution

The following data will be available in its entirety on disk drives at UCB as well as being backed up onto DVD media:

1. VC1 and VC3 files from the ground stations
2. 24 hour LZP data files
3. 24 hour instrument CDF data files

4. GBO Data (ASI & GMAG)
5. E/PO GMAG

The DVD's containing the 24-hour instrument CDF data files will be distributed to Co-I's and NSSDC on a monthly basis.

12. Appendix A. Instrument Data Quantities

Chan	Name	Description	Sync	Bytes
0	DFB64	0 Filters 2 x 8 bytes at 1/16 to 8 Hz	1/16 Hz	2048
1	DFB65	1 Fast Survey (A) V1-V6 at 2 to 256 Hz	1 Hz	3072
2	DFB66	2 Fast Survey (B) V1-V6 at 2 to 256 Hz	1 Hz	3072
3	DFB67	3 Fast Survey E12DC, E34DC, E56DC at 2 to 256 Hz	1 Hz	1536
4	DFB68	4 Fast Survey SCM1, SCM2, SCM3 at 2 to 256 Hz	1 Hz	1536
5	DFB69	5 Particle Burst (A) V1-V6 at 2 to 256 Hz	1 Hz	3072
6	DFB70	6 Particle Burst (B) V1-V6 at 2 to 256 Hz	1 Hz	3072
7	DFB71	7 Particle Burst E12DC, E34DC, E56DC at 2 to 256 Hz	1 Hz	1536
8	DFB72	8 Particle Burst SCM1, SCM2, SCM3 at 2 to 256 Hz	1 Hz	1536
9	DFB73	9 Fast Survey Spectra 1 to 4 16-64 pts @1/4-8 Hz	1 Hz	2048
10	DFB74	10 Wave Burst Spectra 1 to 4 16-64 pts @1/4-8 Hz	1 Hz	2048
11	DFB75	11 Wave Burst (A) V1-V6 at 512 to 8192 Hz	32 Hz	3072
12	DFB76	12 Wave Burst (B) V1-V6 at 512 to 8192 Hz	32 Hz	3072
13	DFB77	13 Wave Burst E12DC, E34DC, E56DC at 512 to 16384 Hz	32 Hz	3072
14	DFB78	14 Wave Burst SCM1, SCM2, SCM3 at 512 to 16384 Hz	32 Hz	3072
15	DFB79	15 Trigger (and Engineering Data) 28-32 values at 16Hz	1 Hz	512
16	DFB80	16 Spin Fits (E12, E34, E56, V1, V2, V3, V4 * 128Hz)	1 Hz	1792

Chan	Name	Description	Sync	Bytes
17	ETC_MOM	ESA and SST Moments [13x2x2 + 13x2x2 every spin collected for 16 spins]	Spin/16	1664
18	eESA_FDF	ESA Burst Electron 88x32 Angle*Energies	Spin	2816
19	iESA_FDF	ESA Burst Ion 88x32 Angle*Energies	Spin	2816
20	eSST_FDF	SST Burst Electron 88x32 Angle*Energies	Spin	2816
21	eSST_FDF	SST Burst Ion 88x32 Angle*Energies	Spin	2816
22	eESA_FDF	ESA Survey Electron 88x32 Angle*Energies	Spin/N	2816
23	iESA_FDF	ESA Survey Ion 88x32 Angle*Energies	Spin/N	2816
24	eSST_FDF	SST Survey Electron 88x32 Angle*Energies	Spin/N	2816
25	eSST_FDF	SST Survey Ion 88x32 Angle*Energies	Spin/N	2816
26	eESA_RDF	ESA Survey Electron 8x16 Angle*Energies	Spin/16	2048
27	iESA_RDF	ESA Survey Ion 8x16 Angle*Energies	Spin/16	2048
28	eSST_RDF	SST Survey Electron 8x16 Angle*Energies	Spin/16	2048
29	eSST_RDF	SST Survey Ion 8x16 Angle*Energies	Spin/16	2048
30	FGE_TML	FGM X, Y, Z from 4 to 32 Hz. Prescaled to 16-bits each	1/16 Hz	3072
31	FGE_TMH	FGM X, Y, Z fixed at 128 Hz. Prescaled to 16-bits each	1/4 Hz	3072
32	FGE_TMH	FGM X, Y, Z fixed at 128 Hz. Prescaled to 16-bits each	1 Hz	768

13. Appendix B. Instrument Data Rates

	Survey							
	Slow Survey (Radbelt science)				Fast Survey (baseline science)			
	S/spin	CH/agle-ergies	BW	bits/s	S/spin	CH/agle-ergies	BW [Sps]	bits/s
FGM	1	5	DC-0.333Sps	27	16	3	5.33	256
SCM	1	8	FB: 1Hz-2kSps	21	32	3	10.67	512
EFI	1	14	DC-2kSps	53	32	4	10.67	683
SST	1	525	spin mom	160	1	2560	spin RDF	2816
ESA	1	1422	spin mom	208	1	4224	spin RDF	7627
Totals (bits/second)				469				11893
Data Rates by category (particles and fields)								
Fields				101				1451
Particles				368				10443

Particle Burst (baseline science, all except HF modes)				Wave Burst (HF modes)							
				Wave Burst 1				Wave Burst 2			
S/sec	CH/agle-ergies	BW [Sps]	bits/s	S/sec	CH/agle-ergies	BW	bits/s	S/sec	CH/agle-ergies	BW	bits/s
32	3	DC-16 Hz	1536	128	3	DC-64 Hz	6144	128	3	DC-64 Hz	6144
128	35	10Hz-128Sps	6656	1024	67	32-512 Hz	51200	4096	67	32-2048 Hz	198656
128	36	DC-128Sps	8704	1024	68	32-512 Hz	67584	4096	68	32-2048 Hz	264192
-	1	spin FDF	10923	-	0	-	0	-	0	-	0
-	1	spin FDF	15019	-	0	-	0	-	0	-	0
			42837				124928				468992
			16896				124928				468992
			25941				0				0

14. Appendix C. Instrument Data Volumes

Compression factor = 1.5

Mbits/ 24 hrs

Instrument	Slow Survey	Fast Survey	Particle Burst	Wave Burst	Total	
FGM	2	10	7	3	21	
SCM	2	20	28	22	72	
EFI	5	27	37	29	97	
SST	14	109	47	0	170	
ESA	18	297	64	0	379	
Total	41	462	183	53	740	
Compressed volume					493	Mbits
Rate/day					493	Mbits

S/C Mode durations / orbits

T_orbit = 24 hrs

S/C Mode	Rel. Allocation		Abs. Allocation		Hours	Seconds	Rate (bps)	Data Vol (Mbits)
T slow survey	100%	T_orb	100%	T_orb	24	86400	469	41
T fast survey	45%	T_ss	45%	T_orb	10.8	38880	11893	462
T P-burst	11%	T_fs	5.0%	T_orb	1.19	4277	42837	183
T W-burst1*	10%	T_pb	0.5%	T_orb	0.12	428	124928	53
T W-burst2*	3%	T_pb	0.1%	T_orb	0.03	114	468992	53
								740

Mbits/ 48 hrs

Instrument	Slow Survey	Fast Survey	Particle Burst	Wave Burst	Total	
FGM	5	10	6	2	23	
SCM	4	19	25	19	68	
EFI	9	26	33	26	94	
SST	28	107	42	0	176	
ESA	36	290	57	0	383	
Total	81	452	163	47	744	
Compressed volume					496	Mbits
Rate/day					248	Mbits

S/C Mode durations / orbits

T_orbit = 48 hrs

S/C Mode	Rel. Allocation		Abs. Allocation		Hours	Seconds	Rate (bps)	Data Vol (Mbits)
T slow survey	100%	T_orb	100%	T_orb	48	172800	469	81
T fast survey	22%	T_ss	22%	T_orb	10.6	38016	11893	452
T P-burst	10%	T_fs	2.2%	T_orb	1.06	3802	42837	163
T W-burst1*	10%	T_pb	0.2%	T_orb	0.11	380	124928	47
T W-burst2*	3%	T_pb	0.1%	T_orb	0.03	101	468992	47
								744

Mbits/ 96 hrs

Instrument	Slow Survey	Fast Survey	Particle Burst	Wave Burst	Total	
FGM	9	10	4	1	24	
SCM	7	19	15	12	54	
EFI	18	26	20	15	80	
SST	55	107	25	0	187	
ESA	72	290	34	0	396	
Total	162	452	98	28	741	
Compressed volume					494	Mbits
Rate/day					123	Mbits

S/C Mode durations / orbits

T_orbit = 96 hrs

S/C Mode	Rel. Allocation		Abs. Allocation		Hours	Seconds	Rate (bps)	Data Vol (Mbits)
T slow survey	100%	T_orb	100%	T_orb	96	345600	469	162
T fast survey	11%	T_ss	11%	T_orb	10.6	38016	11893	452
T P-burst	6%	T_fs	0.7%	T_orb	0.63	2281	42837	98
T W-burst1*	10%	T_pb	0.1%	T_orb	0.06	228	124928	28
T W-burst2*	3%	T_pb	0.0%	T_orb	0.02	61	468992	28
								741